This is a digital copy of a book that was preserved for generations on library shelves before it was carefully scanned by Google as part of a project to make the world's books discoverable online.

It has survived long enough for the copyright to expire and the book to enter the public domain. A public domain book is one that was never subject to copyright or whose legal copyright term has expired. Whether a book is in the public domain may vary country to country. Public domain books are our gateways to the past, representing a wealth of history, culture and knowledge that's often difficult to discover.

Marks, notations and other marginalia present in the original volume will appear in this file - a reminder of this book's long journey from the publisher to a library and finally to you.

Usage guidelines

Google is proud to partner with libraries to digitize public domain materials and make them widely accessible. Public domain books belong to the public and we are merely their custodians. Nevertheless, this work is expensive, so in order to keep providing this resource, we have taken steps to prevent abuse by commercial parties, including placing technical restrictions on automated querying.

We also ask that you:

+ *Make non-commercial use of the files* We designed Google Book Search for use by individuals, and we request that you use these files for personal, non-commercial purposes.
+ *Refrain from automated querying* Do not send automated queries of any sort to Google's system: If you are conducting research on machine translation, optical character recognition or other areas where access to a large amount of text is helpful, please contact us. We encourage the use of public domain materials for these purposes and may be able to help.
+ *Maintain attribution* The Google "watermark" you see on each file is essential for informing people about this project and helping them find additional materials through Google Book Search. Please do not remove it.
+ *Keep it legal* Whatever your use, remember that you are responsible for ensuring that what you are doing is legal. Do not assume that just because we believe a book is in the public domain for users in the United States, that the work is also in the public domain for users in other countries. Whether a book is still in copyright varies from country to country, and we can't offer guidance on whether any specific use of any specific book is allowed. Please do not assume that a book's appearance in Google Book Search means it can be used in any manner anywhere in the world. Copyright infringement liability can be quite severe.

About Google Book Search

Google's mission is to organize the world's information and to make it universally accessible and useful. Google Book Search helps readers discover the world's books while helping authors and publishers reach new audiences. You can search through the full text of this book on the web at `http://books.google.com/`

7

No. 1.

HE
BLI

TRANSACTIONS,

1888.

NEW YORK
PUBLIC
LIBRARY

PUBLISHED BY THE ASSOCIATION.

MANCHESTER:

Printed by Herald & Walker, Back Pool Fold, off Chapel Walks.

1889.

CONTENTS.

1888.

PAGE.

"Modern Machine Tools" - - - - - - - 1
Inaugural Address by the President, Mr. Samuel Dixon, M.I.M.E.

"The Economy of Health in Workshops" - - - 29
By Mr. J. Corbett, of Manchester.

"The Anderton Hydraulic Lift" - - - - - - 49
By Mr. Lionel B. Wells, M.Inst.C.E., of Goole.

"Ring Spinning Machinery" - - - - - - 69
By Mr. Joseph Nasmith, of Manchester.

"The Thermo-Dynamic Analysis of the Gas Engine" - 101
By Mr. Herbert Guthrie, of Manchester.

"The Technical Education of Engineers" - - - 123
A course of Study recommended by the Manchester Association of Engineers.

"The Forth Bridge" - - - - - - - - - 147
By Mr. Thomas Ashbury, C.E., of Manchester.

"Some Types of the Modern Locomotive" - - - 179
By Mr. James Bolas, of Patricroft.

Annual Report - - - - - - - - - - 215

32nd Anniversary Dinner and Meeting - - - - 222

Library, additions to - - - - - - - - 226

Opening of Discussion Session - - - - - - 228

Technical Education - - - - - - - - 229

Resignation of Secretary - - - - - - - 229

Obituary - - - - - - - - - - - 231

Excursion to Forth Bridge - - - - - - - 235

Do. Manchester Ship Canal: Eastham Section- 237

Financial Statement - - - - - - - [illegible]

3-VDA
Manchester

TRANSACTIONS,

1888.

PUBLISHED BY THE ASSOCIATION.

MANCHESTER:

Printed by HERALD & WALKER, Back Pool Fold, off Chapel Walks.

1889.

CONTENTS.

1888.

	PAGE.
"Modern Machine Tools" - - -

NEW YORK
C LIBRARY

MODERN MACHINE TOOLS.

INAUGURAL ADDRESS

BY THE PRESIDENT,

MR. SAMUEL DIXON, M.I.M.E.,

14th JANUARY, 1888,

AT THE GRAND HOTEL, MANCHESTER,

MANCHESTER:
HERALD & WALKER, PRINTERS, BACK POOL FOLD, OFF CHAPEL WALKS.
1888.

OFFICERS.

1888.

President:

MR. SAMUEL DIXON, M. INST. M.E.

Past-President:

MR. ALDERMAN W. H. BAILEY, J.P.

Treasurer:

MR. HENRY MAINWARING.

Trustees:

MR. E. ASQUITH, MR. G. CARTER, MR. R. RAWLINSON,
MR. JAS. WALTHEW, AND MR. T. ASHBURY.

Council:

MR. C. FARMER,	MR. J. HARTLEY,
,, S. BOSWELL.	,, J. HORSLEY,
,, W. TAYLOR,	,, W. LAWSON.

Secretary:

FRED. WALTHEW,
18, Hullard Street, Old Trafford, Manchester.

Assistant Secretary and Librarian:

FRANK HAZELTON,
15, Raglan Street, Hulme.

No 56

THE
BL

TRANSACTIONS,

1888.

NEW YORK
PUBLIC
LIBRARY

PUBLISHED BY THE ASSOCIATION.

MANCHESTER:

Printed by HERALD & WALKER, Back Pool Fold, off Chapel Walks.

1889.

own construction, and just as it was desired to see the offspring perfect, so was it absolutely essential that the parent itself should be perfect, hence he attacked the problem from its fundamental point.

We found Watt, in 1769, rejoicing that his cylinder was so well bored that he could scarcely get a half-crown piece between the piston and the cylinder, but we find Sir Joseph Whitworth, in 1840, with his cylinders and pistons so perfect as to differ by less than one millionth part of an inch in diam. Here we have the two extremes of mechanical accuracy, for whilst it is hardly possible to imagine worse approximations to true cylinders than Watt had to contend with, so is it practically impossible to have more perfect ones than those produced by Sir Joseph Whitworth. He it was also who first determined a true plane, because he fully recognised its importance as the basis of a vast family of Machine Tools.

We all know the means he adopted to obtain it, as described in a paper which he read before the British Association at Glasgow in 1840, on Plane Metallic Surfaces or True Planes. We can all readily see how highly important it is to have a *true* plane as the basis of such a machine as the planing machine, yet it is equally important throughout the whole range of Machine Tools that those fundamental surfaces upon which all the accuracy of the work produced entirely depend should themselves be *absolutely* perfect, or as perfect as it is possible to make them.

Whilst indicating to us these cardinal points of Machine Tools we are greatly indebted to him for the introduction of those standards of measurement which have done so much to systematize our work, and which have rendered his name familiar throughout the world.

ake such a case as his determination of the standard screw ds, which, after being almost universally adopted in nd, is to-day spreading steadily over Europe, notwith- the difference between the English and the Metric I happen to have somewhat peculiar means of testing find many of the best continental engineers are oting the Whitworth standard Vee threads, both as

regards diameter and pitch of thread. I do not wonder at this, for anyone who knows the confusion which prevails with the Metric system, among Vee threads, cannot be surprised to find them turn eagerly to any recognised standard.

I cannot but regret that our American cousins should have determined, with their usual waywardness, to have a standard of their own, which, though differing but little from our own, is yet sufficiently distinct to prevent an interchange. I incline however, to the belief that the Whitworth standard will be found too much even for them.

Now for the purpose of considering some of the features of modern Machines, I would ask you mentally to accompany me around, say, in the first instance, a well-equipped establishment, adapted for *general* engineering work, and it will be well if we commence much in the same manner as the work.

Although it is my intention to consider more fully the machines adapted for the cutting of metals, yet let us take a view of the Foundry. Here there is not in the actual process of moulding anything very new, except it be the capacity for making immense castings; but this is more a question of dealing with heavy weights when cast, than that of moulding.

Whether any limit will ever be attained is extremely doubtful, except it be that of distant transport. The introduction of the improved power travelling cranes in more recent years has completely relieved the foundry of its ancient difficulties, where the old jib cranes used to threaten to bring down the building when lifting any heavy weight; but the question of the transportation of objects in a workshop is an extremely important one, which has received great attention in recent years. Among lighter work we have the extensive developments of plate moulding, by hand and machine, with very varying types of machines, each adapted for its own special work. In large wheel moulding there has been almost a complete transformation of procedure, for where formerly it was necessary to make a whole pattern, to-day, by the introduction of wheel moulding machines it is, as we all know, only necessary to make a small section of the rim to mould a single tooth from. Here accuracy of construction in the machine is of the greatest moment, for upon it everything almost depends, and though wheels of extreme

accuracy can be obtained, yet I think there is a decided tendency particularly among continental engineers, to proceed by casting the teeth only approximately to form and then machining them to an exact form and pitch. The relative merits of cast and cut teeth of wheels is a strongly contested one, but I think for high speeds the cut teeth will prevail.

In connection with moulding I may mention a curious practice I have met with in a Belgian workshop. It is, I believe, the only place in the world where moulds are made from *drawings* only, or perhaps I should more correctly say without patterns, and these not simple ones but extremely difficult ones. The castings I examined seemed perfect in every respect, and although I cannot speak as to its economy, yet I was assured by one Corliss engine builder who had *all* his castings made by this process that there was distinct economy in it. He simply sent his drawings to the foundry and had made no patterns whatever since its adoption.

Having hurriedly glanced at the foundry let us next consider the production of Forgings.

Here, although the skill of the smith must ever remain a prominent element, especially among small work, yet the modern methods introduced materially tend to reduce the personal element, and at the same time to produce work infinitely superior, both in size and quality, to that produced by the last generation.

From the old "Olliver" (which by the way has now got steam applied to its form), *Nasmyth* passed about the year 1838, at a bound, to the extremely powerful steam hammer, which has had such great influence on mechanical construction, and whilst the steam hammer will retain its position for what is now considered medium work, yet for extremely heavy forgings now possible in steel, it is superseded by those mighty Hydraulic Forgings machines, developed by the firm of Sir Joseph Whitworth & Co.

In the steam hammer, the limit is, I believe, about 25 tons, whilst among these modern Goliaths there is practically no limit, a pressure of some 4,000 to 5,000 tons being more easily controlled than the 25 tons steam hammer. These same principles, carried out in smaller machines, contain elements of

great promise. It is really curious to think that the determination of a Catholic priest to assert his undoubted right to offer his morning's devotions in peace, should have led to the construction of these silent monsters, which are to-day, an absolute necessity. In addition to these primary types of forging machines, we have a numerous variety of accessory and special inventions, such as the hot and cold saws, the Ryder forging machines, &c., and just recently we have had the Gas Hammer introduced.

From a short consideration of the production of the objects themselves, we come to what is usually the first step in finishing, that of *Planing*.

Here we come to a machine which is entirely the development of the present century, and about the origin of which an exceedingly hot controversy has raged, its invention being claimed by several. It was very probably developed by several, but it certainly existed in a fairly perfect form about the year 1820, in the works of Fox, of Derby, widely noted for his excellent productions in textile machinery and tools. The first publication having reference to it is I believe in 1825, when Clement, of London, received the award of the Society of Arts for his machine.

From having the table driven by a chain and running on numerous friction rollers, it was by Whitworth much improved, as he recognized the vast importance of accurate slides. The forms of these slides were originally vees, or one vee and one flat, and these vees after gradually increasing in the angle have steadily approached, and have now in the most improved machines become flat slides. These with vertical guides to prevent the lateral motion of the table, are capable of taking heavier cuts with the same strap power, the vertical guides preventing the possibility of the table yielding when taking heavy side cuts. Why the vee forms were ever adopted I can never make out, for the lubrication is quite as easy in the flat slides as in the vees.

For most ordinary dimensions of objects, say up to 30ft. by 10ft., it is still the practice to reciprocate the work upon a table rather than traverse the tool, but this raises an important feature in Machine Tool Construction—to determine the limit

at which it is more profitable to move the cutter to the work rather than the work to the cutter.

Considering the question of space alone, the former requires for an object 30ft. long, a shop length of at least 60ft., whereas by the latter it would be accomplished within a length of about 36ft., an important consideration. Considering the question of the weight of the object, it would certainly seem more natural to manipulate the tool rather than the work. This has been, to some extent adopted, particularly in those immense side Planing Machines, where objects of any size may rest upon a foundation plate, and have the sides planed 10ft. or 12ft. high, by a tool traversing either longitudinally or vertically. In the most modern Planing, the various motions of the tool are so arranged as to plane every side except one (that upon which it rests on the table) of a complete cube, and these perfectly true with each other, and also at one setting. Machines adapted for cutting in both directions were introduced by Whitworth many years ago, in the famous "Jim Crow" tool box, and in recent years an attempt has been made to revive the practice of cutting in both directions, but so far, except on special objects, without very encouraging results. One might indicate some of the lines upon which it is probable the future Planing Machine will be developed, but as its very existence is menaced by the advancing Milling Machine, I do not think it profitable to pursue the question further.

The next group of machines we come to are the boring machines, a very considerable family even without considering the special varieties. The process of boring, as all are well aware, is one of great antiquity and first employed I believe for cannon, the method of fixing the cutters in a revolving head being not very widely different from the practice of to-day.

But for anything approaching really accurate boring we must not go further back than Watt's time, for here he met almost his greatest difficulties. The method of procedure for such objects as cylinders practice differs somewhat, in most cases it is by a boring head carrying the cutter traversing on a stout bar. This though the most general practice is objected to by some, and I have an old friend who still religiously bores his horizontal steam engine cylinders with a single cutter in

the middle of a bar twice the length of the cylinder (the cylinder traversing), and claiming for it that the strains being always the same upon the bar he is able to bore a perfectly true cylinder. The most modern practice seems to be to take a heavy roughing cut through the hole and then finish by a light cut having a traverse of some $\frac{3}{8}$ to $\frac{1}{2}$ inch per revolution, thus avoiding the wear of the tool which, of course, tends to make the hole conical. The boring of large objects is one giving rise to many special forms of machines adapted for particular purposes, but the general tendency of all modern work among large objects is to machine as many parts as possible at a single setting, thereby ensuring greater accuracy, and the saving of the time required to transport the object and re-set it upon another machine. Take the case of the Corliss engine cylinder, not only must the machine be capable of boring and facing up the main cylinder, but it must also be able to bore at the same time two of the transverse holes for the circular valves, to face or mill their flanges, drill and tap all the stud holes, insert all the gland studs and cut them off to a given length, with every operation within the control of a single workman.

The Slotting Machine invented by Roberts about the year 1820 remains much the same in general form to-day as when it left his hands, though it has now grown to enormous proportions. This machine together with its sister, the Shaping Machine, invented by Nasmyth, have been very greatly improved in details all tending to eliminate the points of weakness and to give them greater solidity and capacity for heavy cutting without vibration.

Drilling Machines.—From the time when Watt, I believe, first constructed the power Drilling Machines, there has been one steady advance in the improvements, these all tending towards increased solidity and accuracy, as well as facility in the setting of the work. They have been largely necessitated by the introduction of the twist drills, for many years well known in a somewhat rude form in our workshops, but in recent years very systematically produced in America, and now also in England. As these enable much heavier cuts to be taken, it has been necessary largely to increase the strength of the machines, both to drive these drills, and also to resist the

increased strains brought upon them. Among the more Universal Drilling Machines, such as the Radial Machine, modern practice demands that not only shall holes be drilled, but where necessary shall be instantly tapped by the machine, so as to ensure perfect accuracy, and dispense with the tedious and imperfect practice of tapping holes by hand. An excellent method of doing this is by having two spindles upon the same saddle, running at different but relative speeds, so that instantly the hole is drilled, the second spindle, by a single movement, can be brought over the exact centre of the hole, and the hole tapped any desired depth. This can be done without stopping or reversing the machine, and without altering a single belt. Of some of the numerous special members of this family I hope to speak under the heading of special tools.

The next group we come in contact with is that of the Lathes. The origin of the Lathe is involved in the greatest obscurity, being probably a continuous development of the potter's wheel. Before the introduction of steam driving power the Lathe remained an extremely simple machine, largely employed in producing artistic objects, but by the invention or at least the practical introduction of the slide rest by Maudsley the Lathe has been transformed and developed to an enormous degree.

The first step from the potter's wheel to that of turning an object between two centres was a very great one, and I should think came about gradually; for I cannot imagine anyone arriving at the conclusion by reasoning that it was possible to hold objects between two small centre points and operate upon them as we do find it possible. With the introduction of the slide rest by Maudsley and the extension of these principles to the slide lathe by Clement a great advance was made, which was steadily continued for many years, but during recent years there have been vast strides made, necessitated mainly by the increased magnitude of the work to be accomplished and also by the increased competition. Its chief direction has been in the multiplication of cutting tools, for a man cannot now be permitted to gaze vacantly at the slow advance of a single tool. The number permitted on any Lathe for general work should never be less than two, in the shafting Lathes 3 tools, and in a Lathe for heavy forgings 4 to 8. In pulley Lathes 4 to 6 tools.

Fly-wheel and rope-pulley Lathes from 8 to 16 tools cutting at the same time. This necessity for increased cutting power in Lathes has required great modifications, so as to eliminate all those elements of weakness. Formerly it was a sufficient consideration in a Lathe to be able to accomplish a given work, to-day every one can do it, but it is how to accomplish it in the least possible time. How many men will point with pride to the fact that with a certain Lathe they are able to turn a pulley 20in. diameter or a fly-wheel 20ft. diameter, but one cannot resist a smile when the most important element as to how long it will take to do it is blandly left out of consideration. For the fact is ignored that the workman who is quietly watching perhaps a single tool is by far the most expensive machine and not the Lathe. Take the case of a small fly-wheel, say 7 to 8ft. diameter, to-day it is necessary to bore and to turn both bosses as well as turn the rim at a single setting on the faceplate, and all operations proceeding at the same time, so that it is possible to finish one of these fly-wheels in say 8 hours, where formerly all the operations were separate and following each other, the work was far from accurate and the time required some two or three times as much. The modern capacity of our steel works for producing heavy forgings has required the construction of enormously powerful Lathes with 4, 6 or 8 tools, each capable of taking a cut 1½in. deep by ¼in. thick, or capable of cutting off something like 5 cwt. of steel per tool per hour.

With constructions steadily increasing in size, the consideration of how to turn the heavier pieces has led in many works to the great neglect of the cost of producing the small pieces such as studs, pins, screws, &c., and as these form a most important part of all mechanism I would therefore for a moment consider them, for they are a fine test of the efficiency of any workshop. If we go steadily round a workshop and note the time taken to produce a small stud or screw, we may say very nearly what is the general tone of the establishment. I think there is nothing so trying as some of the smaller screws, for I fear it is only too frequently found that the screwing appliances are either very primitive or very badly kept, so that the screwing of a stud is often a torturing process.

Formerly it was the practice to forge, centre, and turn every stud, pin and screw between centres, about the most costly process that could be devised. To-day, in the best workshops, this is almost entirely dispensed with, the innumerable host of studs, pins, screws, &c., being turned direct from the solid bar, the cost being but a small fraction of the original process, and the quality of the work produced much superior. It is not merely in small diameters where it is advantageous, but it is often economical for diameters so great as 4in.

Here in these lathes instead of a single tool we find a series of 5 or 6 tools arranged in a capstan or circular rest, each adapted in form to the several operations, and so arranged that any one can be brought into operation instantly. This species of Lathe is, I believe, one of the most valuable improvements of recent years.

A Lathe of this type for use where a great number of small screws are made, has been still further developed by being rendered entirely automatic, so that in establishments for the manufacture of screws in great quantities, these machines need only the bar to be put in, and all the operations of advancing the bar, turning, facing, heading, pointing, screwing, and cutting off the stud, are performed quite automatically. The most beautiful example I have seen of this was at the Inventions Exhibition, one adapted for watch screws, where the screw was completely turned, and cut off from the wire, and then passed over and presented to a saw and the head nicked, all being entirely automatic.

A comparatively recent development of the Lathe has been for the purpose of making articles in duplicate. Modern methods requiring greater system and interchangeability of parts, has necessitated the perfect control of the tools of the Lathe in their movements, both as to diameter, and also as to the length turned.

This is well illustrated by the latest forms of Lathes for Brass Finishers, and where the articles, such as these, are in great quantities, a number of distinct operations, such as boring, screwing, and turning, being required upon an object, a series of tools are mounted upon a capstan rest, with revolver motion hand. In this, each tool is controlled by a pair of stops,

one to determine the length, and the other the diameter of the portion upon which it operates, all being so arranged, that as each tool is brought into position by a hand lever its own pair of stops are brought at the same time.

The old process of chasing threads by hand, has been the most tenacious and long-lived among Brass Finishers, but the pressure of competition, and the consequent necessity for systematic interchangeability of parts, is now compelling it to yield very rapidly.

The next group of machines is that of the Milling Machines, the most modern of all, and well worthy of the great attention paid to them by Engineers. So far as extended practical use is concerned, they are modern, but by no means modern considered as a process of cutting metals.

This process of cutting metals by means of revolving circular steel cutters, having a number of cutting edges, was used to some considerable extent by Clement, about 1830, for grooving taps, &c., by fixing a revolving cutter to the slide rest of a Lathe. It was here probably where Nasmyth and Whitworth first became acquainted with the system.

The simplest form of milling is that of a number of separate tools fixed in a revolving head so that the ends project and form cutting edges. This is a kind of cutter which is largely used, in diameters of several feet, for many purposes of rough cutting, such as squaring up the ends of girders, cutting out cranks, &c. It was a process somewhat similar to this of using a built-up cutter, which Nasmyth of Patricroft adopted for finishing the sides of nuts some 40 years ago.

These compound cutters allow of each tool or cutter being withdrawn independently and sharpened, but the system requires so much delicacy of adjustment where fine work is required that the extreme cost entirely debarred their extended introduction. The great demand was for a solid cutter capable of being sharpened without having to be softened, re-cut and again hardened, and many attempts were made by revolving an oil stone, but the delicacy of the operation was too great to ensure its success.

The great step in Milling was the introduction of the emery wheel for the purpose of sharpening the cutters, and as I was in

considerable doubt as to whether the emery wheel was first made in this country or introduced from America, I have made careful enquiry, and I find it was the invention of the late Mr. George Hannay of Ulverston, brother of Mr. Hannay, of the firm of Schneider & Hannay, the original founders of the Barrow steel works. Certainly with the introduction of the emery wheel and speedy invention of numerous highly ingenious ways of using it, was supplied the great and long-felt want for sharpening these circular cutters without softening them.

Another step of smaller moment was the introduction of spiral cutters, tending towards increased finish of the work. One of the great advantages of using the circular cutter as against the single-pointed tool is the increased cutting speed at which they can be used. In an ordinary sized cutter there is something like 30 to 40 teeth, and as each cutting edge is therefore in operation, but about one-tenth of a revolution, and cooling down the remainder of the revolution, we can therefore run a cutting edge for this short period at a considerably increased speed.

The highest cutting speed for wrought iron, with a tool continuously employed, we know to be 20ft. to 30ft. per minute, but when milling we can employ a cutting speed of 60ft. to 80ft. per minute.

In fact, taking the work of general engineers all round, I should think that the saving of time by using the Milling Cutter is from 20 to 50 per cent.

Many persons consider these Milling Cutters are very fragile, but it is curious to note that this snipping and fracture does not occur with actual cutting, but with running the work against the cutters, before the self-acting feed motion is put on This suggests a remedy which I know to be very effective, and that is never to allow the workman to run the work up against the cutter by hand, or until he can feel it, but to stop, say, a short distance from it, and set in the self-acting feed. But this is talking of details. There is no group of machines which so thoroughly test their own sound construction, as do milling machines, for unless the greatest solidity, together with the highest accuracy of construction be employed, they are practically worthless. When well constructed, they promise to

become one of the most capable tools of the constructive Engineer, for not only is the work produced in greater quantities, but it is also more perfect, and requires little or no further finishing at the hands of the workman.

This group of Milling Machines already form a numerous family, adapted for almost all the operations formerly performed by the Slotting Machine and Shaping Machine, and now the Planing Machine itself is being threatened by this rapidly advancing tool.

In addition to the ordinary forms of straight lines and circles, of which constructions are usually made up, this process of cutting metal lends itself very advantageously to the machining of irregular forms, or profiling, as it is called.

Without entering into further details, but taking all things together, this group of machines, I think, may without doubt be considered the machines of the future.

Having now considered those of the chief families of machine tools to be found in almost every Engineer's works, I would turn for a moment to some of the groups of special machines, for it is in this branch of Machine Tool Construction, where some of the greatest advances have been made in recent years.

I need not trouble you with a definition of what are considered special Machine Tools, but the greatly increasing competition in the several branches of engineering and allied industries has called for the exercise of the highest skill in designing machines for the production of particular objects, where those objects are found in sufficient quantities to justify the outlay, and it is this great tendency to specialization which in recent years has enabled Englishmen, in spite of being handicapped by the protective tariff of other countries, to maintain their position against the world.

I cannot stop to consider more than two or three of these great special branches.

Take for example Locomotive building. Formerly it was the practice for these to be constructed in general engineering works where mill engines and general miscellaneous work was in progress, but to-day we have some of the very finest specimens of special machines employed in the production of the several parts of the Locomotive, in fact there is scarcely a single piece

of the Locomotive for which there is not to-day a machine and sometimes several machines specially designed for its rapid production, and though many of them have become obsolete by a change in the design of the Locomotive, yet the first cost of one of these special machines is but a small item compared with the increased accuracy and rapidity of production.

Take for example a piece common to all Locomotives, say a connecting rod. It is first planed by a special machine of short stroke, for doing both ends of two rods at the same time. It is then milled to form along the ends and edges. Again by a special machine the cottar holes are drilled out both ends at once, and both sides of each end at the same time. Again a special machine is constructed for boring both ends at the same time, besides other special machines again for finishing the brass steps, cottars, &c., all for completing this small portion of a Locomotive.

I think the finest specimen of machine work I ever beheld, was a connecting-rod, with its straps, steps, cottar holes, cottars, and everything complete, which had been finished perfectly by machines, and had never been touched with a file. I should say it was done by a foreign firm, but it was quite exceptional.

I have taken the trouble to put down from memory, a list of the special machines for Locomotives with which I am acquainted, but I shall not trouble you with reading it, as I was surprised to find that there are at least 45 distinct machines specially dedicated to the construction of Locomotives, besides all the great families of general Machine Tools, such as Shaping, Planing, Slotting, Milling, Screwing Machines and Lathes, and without considering the machines employed in producing the numerous fittings, such as Injectors, &c., &c.

The above are simply for construction of the Locomotive, but if we consider its repair, we find again a numerous family of special machines.

This construction of the Locomotive is but a type of what takes place in the construction of almost any class of special articles, both large and small.

If we turn to the construction of Textile Machinery, we find innumerable Machine Tools, each specially designed for its own particular duty, and where formerly the chisel and the

file held sway, we find the various parts all interchangeable, and bolted together directly from the machines; in fact, in this way has the construction of Textile Machinery been reduced by organisation and special machines to such a low prime cost, that it is now found cheaper frequently to put down a new machine made by specially organised machinery, rather than to repair one by ordinary day labour—a triumph certainly for construction.

If we turn to the smaller articles, such as Bolts and Nuts, we come at once upon a branch highly interesting, and much developed in recent years.

When we consider how largely the Screw and Nut enter into all our constructions, it is a matter of considerable importance that they should be produced both quickly and accurately.

Take the simple process of screwing a bolt. Formerly the thread of a screw bolt was made by its being made to revolve between a set of dies, which were so horribly designed that the thread was more pressed upon the bolt than cut out, and the dies had to be traversed backwards and forwards several times before anything approaching even a respectable thread could be obtained; to-day, after a thorough study of all the special features entering into the process of screwing a bolt, it is possible to produce a most perfect thread to a standard diameter, pitch, &c., at a single passage of the bolt through the dies, even in bolts up to 3in. or 4in. diameter, and without the slightest necessity to stop or reverse the machine.

Among small Bolts, say ⅜in. diameter, but 20 years ago a production of something like half a gross per hour would have been considered good work and these would have but indifferent threads, but to-day so many as six gross per hour can be produced with perfect threads.

Apart from the numerous machines used in forging the Nuts, &c., we find an extremely interesting series of machines for producing bright Nuts, and just as in former years it was regarded a masterpiece of handicraft to produce a perfect bright hexagonal Nut by hand, so is to-day a by no means contemptible performance to produce one of these same Nuts by a series of special machines, and at the same time rapidly.

After briefly considering the Machine Tools for Bolt and Nut Manufacture, we will turn for a moment to a totally different

branch, such as the Brass Finishing Trade. Here we again find a highly specialised manufacture springing up, for to-day it is not the firm manufacturing every variety of fittings that prospers most, but the one, which, having carefully sounded the market for a particular branch of it, has at once adapted itself to the demands, and put down special machines for that particular branch. If we look to the Gas Fitting, to the Water Fitting, or to the highest branch of Steam Fitting and Injector Trade, we find each with its own special Machine Tools, everywhere tending to supplant hand labour. In no branch more than this has hand labour so tenaciously held its ground, for hand labour becomes very efficient among brass so far as speed is concerned, but it cannot be compared to machinery for accuracy. In this manner we might go over innumerable branches of Industry, such as the manufacture of Fire Arms, Heavy Ordnance, Sewing Machines, &c., all exceedingly specialised, and note what enormous progress has been made in recent years, but I will take but one other, and that is :—

Boiler Making.—Here we have an industry, which was but comparatively a few years ago, one of the most primitive branches of Engineering, a Punching and Shearing Machine, and a set of Plate Bending Rolls, being considered sufficient plant with which to commence a Boiler Works, in fact it was but a few degrees above the country smithy. To-day, in the best workshops, prominent here around Manchester, all this is changed, and we have now a very highly specialised branch of Engineering. The demand for Boilers for carrying high pressures has necessitated the introduction of special machines for the purpose of ensuring accuracy of workmanship.

Another important step was the introduction of steel plates, giving, as it did, the capacity to produce plates of almost any size, so that to-day, we find Plate Planing Machines, adapted for plates up to 30ft. long, and rolls to correspond for bending plates up to 1¼in. thick. In addition to the many special machines adapted to particular types of Boilers, such for instance, as the flanging, and the turning and drilling of the Adamson flues, the Galloway tube, &c., we have numerous machines adapted for various types of Boilers. Where formerly,

with iron plates and low pressure, the punching of the rivet holes was considered quite sufficient, to-day, with high pressure and steel plates, the Boiler Maker cannot afford to run the risk of damaging a steel plate by punching, and his reputation by the consequences which would arise from a flaw escaping undetected.

When the demand was first made for having all rivet holes drilled when the plates were in position it was considered to be an enormous increase upon the cost of a boiler, and doubtless the primitive appliances then available for drilling the shells, flues, &c., were highly suggestive of such a result. With the demand has been a rapid development of special machines for this purpose, commencing with the simple radial arm drill, then the two-headed horizontal drill of independent action with the boiler shell suspended from the crane. This machine necessitated the marking out of the plates. The next step was with 3 horizontal drills around a circular table, upon which the shells were mounted and divided circumferentially by mechanical means. This machine was improved considerably in detail and gave good results, but one of the latest is a machine in which 6 drills, all under the control of one man from a single position, are in operation either upon the circular or longitudinal seams, so that the cost now of drilling a boiler is no more than that of one with punched holes.

In connection with constructions in wrought-iron and steel plates I would stop for a moment to note that highly important family of Hydraulic Tools, so developed in recent years. Though the principles first applied by Bramah about the beginning of this century remain the same, there has been a wide application and great improvements in Hydraulic appliances, especially for riveting, flanging, and heavy shearing and punching machines. This highly concentrated form of Hydraulic pressures has proved the most convenient form of applying heavy pressures, and we have to-day some of those useful portable riveting machines adapted for almost every form of construction, and we have an interesting series of machines up to those extremely powerful shearing machines for cutting slabs in steel, as much as say 10in. thick, 30in. wide. I have already mentioned those enormous Hydraulic Machines for forging heavy marine crank

shafts, guns, which at the present day are the giants of this family, but so rapidly has the branch developed that it is utterly impossible to say where, if ever, it will stop.

There is one point about which I would remark, though not strictly classified under my subject, and that is the great importance of a thorough study of cutting tools themselves.

Formerly it was the custom of almost all workshops to permit each workman to construct or superintend the construction of his own cutting tools. This with the varying degrees of intelligence possessed by a body of workmen and the varying opinions upon the same points led to the greatest confusion, and a general collection of cutting tools was, perhaps, one of the greatest medleys possible. A thorough study of the correct cutting angles for different materials has led to the possibility of much greater system being carried out in workshops where standard sizes and forms of tools are employed, and which permit of the interchangeability and sharpening of all tools being performed by an independent man for a whole series of workmen.

Having now glanced at some of the chief families of Machine Tools, I would endeavour to summarise a few of the leading features of what may be considered as the Modern Machine Tools.

1. I would place accuracy of construction first of all, and when I speak of accuracy, I not only refer to the accuracy of a new machine, but to all those costly, though highly essential adjustments, for retaining its original accuracy during its lifetime.

The machine must be accurate in itself, and also be capable of producing thoroughly accurate work by the exercise of only moderate skill on the part of the workman, for well-known impediments have rendered it desirable to rely as little as possible on the highly-skilled workman.

2. Solidity of construction, giving vastly increased capacity for production, for the competition of to-day demands the accomplishment of any given work in the least possible time. Here it should be noted how important it is in the cutting of metals that not only should all parts be able to resist breaking strain, but that

they should be sufficiently massive to resist vibration, otherwise the effect of every vibration is plainly seen upon the work. The effect of vibration is also found in the durability of the cutting edge of a tool, for where both the work and the tool can be held with a bull-dog tenacity, there will the durability of the cutting edge be very greatly increased. I think the rapid wear of a tool is often brought about by the snipping of the edges from the vibration in the first instance, rapid deterioration setting in immediately afterwards.

3. The development of appliances for the rapid changing and accurate setting of work. The great need of this is seen on every hand, but I fear that sufficient importance is scarcely attached to it. To test it, just take a walk around all the Machine Tools of any large workshop and note down on one side the machines actually cutting, and on the other side those not actually cutting, whether stopped for adjusting, setting or changing work. The proportion will vary, of course, both with different classes of machines and with the efficiency of its management, but it is surprising to find how many are stopped from one cause or another. I have taken some trouble to ascertain this proportion in different works of general engineers, and it is curious to note that this proportion is often so great as 2 to 1, so that only about $\frac{1}{3}$rd of the actual working time is spent in cutting, whilst so much as $\frac{2}{3}$rds is spent in setting, changing, &c. Here is one of the chief points where the construction of specialities in quantities gains so enormously, for where the work is in sufficient quantities special appliances are quickly contrived not only for ensuring accuracy but for the rapid changing and setting of work.

4. The special adaptation of almost all Machine Tools to the particular requirements of each workshop.

This has been brought about by machine tool construction having become a highly special branch of engineering, to which many engineers have specially devoted themselves, and which permits such experienced men from an inspection of any piece of work to say almost instantly what is the best method of proceeding, and from their special knowledge of the adaptability or combination of the wide families of Machine Tools, to prepare quickly any desired modification to suit a particular work.

The above are some of the chief characteristics of Modern Machine Tools, but it is such a fruitful theme that one might dwell upon it for hours.

Of the important part which Tools play in the world I need not treat before such an Association as ours. Man has been defined as a "Tool making animal," and most true it is, for do we not judge the intellectual standard of our ancestors by the tools which they used? If we go back to remote ages we find those primitive tools made of stone, and we reason about and very fairly estimate the type of intelligence of the men who formed and used them. During later ages we come to those of bronze and iron, and posterity will speak of this, I think, as the age of steel, yet in each of these the tools used are the strongest possible evidence of the intelligence possessed by our ancestors during these ages. As we find this view of mankind to hold as a whole, so do we find it to hold almost individually, the condition of the draughtsman's pencil, the pattern-maker's plane, the fitter's chisel, and the turner's tools, &c., are all the very strongest evidence of the capacity of the individual man.

If we take a step higher and judge, in these days of competition, the productive capacity of any firm, it can be fairly estimated by an inspection of the machines and tools employed, notwithstanding the old proverb which says that a "cobler has always the worst of shoes."

Before closing this address I would like to say a few words upon the future of our trade as Engineers, a question which was recently raised by one of our distinguished members a few months ago, in an inaugural address, and also upon the partially suggested remedy. That foreign competition is undoubtedly keen, everyone doing any continental trade is well aware, but it is only by visiting the various workshops, and personally investigating the question, that the true magnitude and nature of this comes out.

Formerly, the foreign Engineers came to us, and it was simply a question of quoting for machinery delivered, say, in Manchester, with numerous extras for packing, &c., and with terms of payment, such as cash on completion. This was a very comfortable proceeding, in which we were never acquainted with the actual cost of delivery; but to-day, all this is changed,

and it is necessary to quote for Machines delivered at the customer's door, no matter where, and with terms of payment in accordance with the usages of the country, and often with a legalised residence in the country, so that any necessary legal action may be taken in the customer's own country.

I once heard, on the Manchester Exchange, a late member of our Association, state his foreign conditions of payment, in the forcible Lancashire dialect, as follows :—

"Ah (I) mun have one half before ah (I) touch th' job, and t'other half before tha touches it." I need hardly say our friend would have had to modify his terms slightly to have come up to the modern requirements.

It was suggested that some return might perhaps with advantage, be made to protection, and although it would be out of place to enter into any detailed discussion of the question here, I can only certify my opinion that any return to protection on the part of Englishmen, is entirely out of the question, for immediately we begin to tax anything, the cost price of all our productions would rise, and we should stand so much the worse in any competition.

This is not only my own opinion, but the honest opinion of numerous foreign Engineers, with whom I have discussed the point, and even whilst strictly advocating protection for their own country, they hold that no other prosperous policy is possible for England, compelled as she is, to depend very largely upon her foreign trade.

Now you may briefly ask what I have got to suggest. I can only say that in my opinion there is no royal way and none but the one upon which we have long been journeying. The great thing is to improve our pace, by increased economy in our production, by the improvement of our business capacities for dealing with foreigners, and by the continual exercise of that fertility of mind in invention which has earned for Englishmen the respect of the world, and which causes foreigners often to exclaim that an Englishman is always practical.

Again, I think it highly important that we should give a thorough training to our workmen, not merely how to use Tools but how to use their brains to the greatest advantage, for there is a great latent power here.

I would, in addition to his technical training, supply him with sound geographical and commercial knowledge, so that he should be fully acquainted with the true nature of the competition which threatens him all over the world. Was this but fully realised, I have not the slightest doubt that once Englishmen felt that they were pitted against foreigners they would be able easily in the present hours of labour, by a thorough co-operation, to increase their production at least 20 to 25 per cent. We must not always think that the high protective duties in any country are against England alone, often the competition is among three or four nationalities apart from the internal competition. In Italy, for instance, the English engineers have to compete with Swiss, German, French, Belgian, and sometimes Austrian firms, but the heavy duties are levied on each alike. I often wish that some of the leaders from whom men usually take their ideas, really had to follow up some prominent foreign enquiry and there take his turn at an interview with some engineer having various tenders before him, hear his remarks thereon, and have to plead his cause probably in a strange language. Whilst doing so he would probably remember that he had left the representatives of firms from two or three different countries in the ante-room all eager for the fray, and perhaps ready and able to make concessions ef enormous extent to secure the order. He would then find out what competition really is, when a man has got down to the quick, and when with a thorough knowledge of the prime cost before him, he feels that it is not a question of profit but the fear of positive loss.

I fear the old notion that one Englishman is worth four or five foreigners, is only too prevalent to-day. It is an old, pleasant delusion, and though I would not for one moment question the higher average ability of Englishmen, we on the other hand, cannot ignore the hours of labour, and the rate per hour at which his labour can be purchased.

There is one remaining point of considerable importance, but I have some hesitation in mentioning it; however, I will brave the good-natured smile and suggestive thoughts of there being "nothing like leather," and say what I frankly believe, that many of the oldest Engineering concerns in this country are heavily burdened with antiquated machinery. Many of them

have grown up in those good old times, when the question was simply, "*Can* you do it?" and not in these competitive times, when the question is, "How much can you do it for?" A notable feature in good Machine Tools is that they do not so much wear out as become antiquated; hence one sees in going round some workshops, machines in use, of which the owners are very proud, but which years ago should have been superseded by others capable of doing at least twice the amount of work. They are retained simply because they are capable of doing a certain work, which is all very well if we neglect the question of cost, or it may be, as I have sometimes seen in the case of limited companies, that they represented a certain sum in the stock book, but if carried to the scrap heap, it would be necessary to write them off.

Looking boldly at this question of Capital Account, we can easily see that the vital consideration in any workshop is the workman. If we put a workman's wages at £80 per year, we see that considering interest of capital and depreciation on machinery at the rate of 10 per cent., that the workman is a sort of animated machine, and the representative of a capital sum of £800, so that the question is not whether a man can profitably occupy a certain machine, but whether the machine can profitably occupy the man.

In conclusion, gentlemen, I would not for one moment take a despondent view of the future, for I feel quite sure that with thoroughly combined action on the part of all concerned, English engineers will continue to hold their own firmly against any fair competition in the world, and I am pleased to note that with the rapidly improving prospects throughout the world that English trade is tending once more to assume that buoyant and elastic tone so characteristic of it in former years.

Mr. Alderman Bailey had much pleasure in proposing that the thanks of the Association be given to the President for his Inaugural Address. He said it seemed to possess this advantage, that they might extract any number of texts from it either for their own self-condemnation, or the reverse, with reference to the employment of tools. He should have liked, however, a

little more to have been said about Richard Roberts, who he thought had been the greatest tool inventor and designer in this district. He thought history was particularly wrong in reference to the origin of the slide rest and slide lathe, in attributing their conception to ourselves. He had in his possession a book which gave a description of the cutting engine, with change wheels, which was in use in the last century in France. Naturally, if wheel cutting existed at that time, the very fact of sliding the plates backwards and forwards, and sliding the cutters, would certainly suggest the slide rest, and from that the slide lathe. The fact was that very little literature existed of the development of mechanical tools abroad, and as the greater portion had been written in England we have looked upon ourselves as the greatest inventors, whereas really we were the last to become civilised.

Mr. Ald. Asquith having seconded, and Mr. Thomas Ashbury supported the vote of thanks, the same was carried with acclamation.

The President briefly returned thanks, and the proceedings terminated.

YORK
BRARY
X AND
DATIONS
L

29

ECONOMY OF HEALTH IN WORKSHOPS.

A PAPER

READ BY

MR. J. CORBETT,

(Member of the Association,)

On 28th JANUARY, 1888,

AT THE GRAND HOTEL, MANCHESTER.

SAMUEL DIXON, M.Inst.M.E., President,

IN THE CHAIR.

MANCHESTER:
) & WALKER, PRINTERS, BACK POOL FOLD, OFF CHAPEL WALKS.
1888.

OFFICERS.

1888.

President:

MR. SAMUEL DIXON, M. INST. M.E.

Past-President:

MR. ALDERMAN W. H. BAILEY, J.P.

Treasurer:

MR. HENRY MAINWARING.

Trustees:

MR. E. ASQUITH, MR. G. CARTER, MR. R. RAWLINSON,
MR. JAS. WALTHEW, AND MR. T. ASHBURY.

Council:

MR. C. FARMER,	MR. J. HARTLEY,
,, S. BOSWELL.	,, J. HORSLEY,
,, W. TAYLOR,	,, W. LAWSON.

Secretary:

FRED. WALTHEW,
18, Hullard Street, Old Trafford, Manchester.

Assistant Secretary and Librarian:

FRANK HAZELTON,
15, Raglan Street, Hulme.

THE ECONOMY OF HEALTH IN WORKSHOPS.

The broad title of my subject would allow of too wide a range for the compass of one paper, so I take it in the more limited sense of "The Economy of Health in Engineering Workshops," but of course many of my remarks will apply almost equally to workshops for other trades.

Before entering on the more practical divisions of my subject, it may be well to call attention to its importance to employers, since it is on them, rather than on the employés, that the responsibility for the healthiness of the workshop rests.

The well-known principle that "Property has its duties as well as its rights" applies as much to the owner of a workshop and machinery as to the owner of land and buildings, but as in this case both duties and rights are quite compatible with keen self-interest, I will appeal only to this lowest motive in pointing out the great importance of the economy of health in workshops.

During the time that a workman is learning his trade, or any special branch of his trade, he is a less profitable employé than after he has fully learned it. Therefore, as each one must needs pass through the learning stage, the more years of working life that he is afterwards available for, the more profitable on the whole and on the average is his life, and economy of health tends to give longer life.

Again, after the man is in full work, it is of the utmost importance that he should be regular in his attendance, or else his work and the costly tools used in his work may lose time by his absence, and economy of health tends to give more constant health and less loss of time from sickness. More than this, a healthy workman is stronger, more clear headed, more ready and quick in action than an equally good man in depressed health, and these are valuable qualities that an employer may have at his service without paying higher wages.

Finally, I would argue that the healthier workman is the more contented workman, that the healthier workshop is the more comfortable workshop, and therefore that a workshop which gets a repute among workmen for being more comfortable than others, and filled with more contented men, will always be sought after by the most thoughtful and valuable hands, so that the employer can have his choice of men without paying more than standard wages.

Turning now to the practical problems to be solved, I will divide them into four departments :—

1. Ventilation and Heating.
2. Lighting by Daylight or Artificial Light.
3. Water Supply, Dining Rooms, &c.
4. Sewering and Waste Appliances.

These divisions will necessarily overlap at times, but may help to put my notes in order.

VENTILATION AND HEATING.

I pointedly couple these two words together, because during a considerable part of the year, in workshops for comparatively inactive occupations, ventilation cannot be comfortable without heating, and heating cannot be comfortable without ventilation. It often happens that this cosy couple are separated, and each gets a bad name for want of the comforting influence of the other.

There are few departments of engineering workshops where men are too overcrowded for due healthiness, but, as it is possible in rooms for small machines, I will point out that each man should have at least 25 square feet of floor area, and at least 400 cubic feet of space, for comfortable ventilation. The quantity of fresh air required per man per hour is not less than 1000 cubic feet, even in cold weather and with inactive employment, and four times to ten times this amount is required for laborious work in warm weather. Indeed it would be difficult to assign limits to the stream of fresh air eagerly welcomed by hard working men in hot weather.

Let us verify these figures by a familiar example :—Suppose an ordinary room, nearly 13 feet square and 10 feet high,

with a fire-place and chimney. This room will contain 1,600 cubic feet of air, the minimum I have quoted for four men, and you will realise at once that any more men would make the room somewhat crowded. Suppose a moderate fire in the grate, which would cause a draught up the chimney at the rate of about a foot per second, or 3,600 cubic feet per hour; nearly the 4,000 cubic feet which I stipulate as the minimum fresh air supply for four men. Such a room often obtains its whole air supply through the narrow chinks round the door and window, &c., causing sharp disagreeable draughts, but if it had proper air inlets of about one-third of a square foot in area, the draught would only have a speed of about three feet per second, and if properly directed would cause no inconvenience.

This minimum ventilation would have to be increased in warm weather, say by opening a window four feet wide by one foot height of opening, giving 12 times the above air inlet area, and by partly opening the door as an exit. In hot weather both window and door would be widely opened, and a moderate breeze through them would feel perfectly pleasant.

Throughout my remarks on ventilation and heating I will take the above figures as my basis of calculations.

In arranging for the ventilation of a workshop we may, as the simplest course, make openings in the walls, windows, roof, &c., depending on the wind and on the rise of temperature in the workshop to cause the requisite currents in and out. But the wind is utterly variable and unreliable, and as to the rise of temperature in the workshop, it will be highest above the open air temperature in cold weather when ventilation has to be reduced, and will be almost the same as the open air temperature in warm weather, when ventilation should be increased. So mere inlets and outlets to the open air, even when fitted with means of opening and closing them, afford only inadequate and contradictory means of ventilation.

It naturally follows from the above reasoning that all cowls and whirligigs depending on the wind for their action are most active when least wanted, and least active when most wanted. Indeed, I think there are very few mechanical applicances by which the public is more humbugged, and more completely sold,

than the various wind whirligig ventilators which are successfully puffed and advertised by many so-called ventilating engineers.

I only repeat the opinions of some of the most able authorities on ventilation in laying down this rule. That an air-inlet or air-outlet, subject to the action of the wind, should not be arranged to increase its action in increased wind, but, so far as practicable, should be independent of the force of the wind, so as to act evenly.

For this purpose all vent shafts should be well raised above the roofs, like chimneys, and be roofed over and protected from rain either by louvres on all sides, as in diagram No. 1, or by a flat top with side openings, as in No. 2, or a circular double-cone outlet, as in No. 3. Each of these forms allowing the wind to blow through them without materially affecting the draught.

One important rule as to outlet ventilators is to have only one for each room, unless for rooms of great size; because if there are two or more outlets some of them will at times act as inlets, and thus reverse the intended currents. But even with one outlet there are circumstances which will reverse the current sometimes, so it is well to arrange for preventing back draughts causing inconvenience.

No rule can be given for the size of open outlet ventilators, except that already indicated, that at least 12 square inches per man should be provided, and for hot work much more; the inlets being of similar area.

Air inlets should be as numerous as circumstances permit, and arranged to disperse their draughts as widely and gently as possible. Of course, the windows offer the readiest means of inlet, and they should have many small opening casements hung so as to turn their draughts upward; several small casements causing less apparent draught than one large one, by their small currents dispersing into the air more readily. Diagrams Nos. 4 and 5 show some good forms of casement, and in all such it is well to fix stop chains, or have short racks, to prevent their being opened to more than about 30° pitch, for if opened more they often cause down-draught.

Air inlets through walls should always have deflectors to disperse their draughts. If no men work close to them, the best plan may be a simple flat board or plate fixed a few inches off the wall, so as to turn the draught out at all sides, as in diagram No. 6, the draught being turned from the face of the wall by a taper-shaped casing.

Where external appearance is no great object, the best weathering for an air inlet is simply a piece of glazed tile pipe built with a slight outward slope into the wall, and projecting a couple of inches outside, see No. 7; but the most efficient and neatest arrangement, where available, is to have a projecting shield, as in No. 8, with openings on all sides of about 1½in. to 3in. width, not liable to get choked with dust. The shield protecting the inlet from gusts of wind.

All these forms of inlet have regulators shown, to fix them open more or less, or to close them; but it is well to arrange fixed ventilators giving the proper minimum amount of inlet and outlet, and have also regulatable openings for increased ventilation when desired.

For extensive top-lighted rooms, similar to loom sheds, it is needful to bring in the fresh air from the roof, so as to reach all parts of the room. This can best be done by air-tubes hanging down a few feet below the ceiling, and with dispersing boards below them, as in diagram No. 9.

In dealing with a very broad room with other rooms over it, the equalisation of the air can best be effected by having the air outlet at the centre and the inlets round the sides, and some of these inlets may be brought down, as shown in Diagram No. 10, through an upper storey; but as this plan tends to induce reversed currents, it is better where possible to bring the air by large tubes below the floor from the nearest convenient open area, as in No. 11.

In connection with these suggestions to lead air down or up as required, let me state most positively that the popular notions about the necessity of keeping a constant rise in all air shafts, &c., are utterly fallacious. Air can be led up or down, round corners, or through big or little holes, in fact in any imaginable way, if only you arrange that there shall be a balance of tendencies in the required direction.

In workshops such as are used for smith's work, with raised louvres along the ridges of each roof, as in diagram No. 12, the best means of regulating the ventilation is by light wooden doors, hung so as to close, or partly close, the opening just below the raised louvres. Such doors being cheaper and handier than pivotted louvres.

Smithy doors are often made in two heights, to aid ventilation; but a better plan is to have a second door hung just within the room, formed entirely of ventilating louvres, so as to turn the draught upward. A screen board may be hung over the lower part of the door when only moderate ventilation is required, as shown in diagram No. 13.

Having so far referred only to outlets depending on the heat of the room, or the wind for their action, I now turn to artificial means of ventilation.

Heat is the most constantly available power, either by direct fire-heat, or by steam or hot water, but any such means are less positive and more costly than ventilation by power, applied to fans of one form or another.

Heat can be applied by placing a fire or a few gas burners below an up-cast shaft, so as to make a high column of hot air, like that of a chimney. I need scarcely remind engineers that the heat should be applied at the bottom of the flue, and not at the top, as I have known architects and others to place it, under the idea that heat draws air to it. If flame is used thus, great care must be taken to have the flue fireproof, and so arranged that no harm would ensue if the dust in it caught fire.

A much safer plan is to put a coil of steam or hot-water pipes below the up-cast flue, with a regulating valve, so that the most heat may be turned on in hot weather, and the least in cold weather.

The best of all known means for inducing and regulating the ventilation of workshops are Fans driven by power. In most workshops the power can be given by shafting, or steam can be supplied to a little engine attached to the Fan. In some cases it would pay well to apply a gas engine for the purpose; the power required is very small compared with the results attained. Thus one indicated horse-power will, under favour-

able conditions, drive 12,000 cubic feet of air per minute, or 720,000 cubic feet per hour, in and out of a workshop, equal to the draught of about 200 parlour chimneys, and affording the minimum ventilation required for 720 workmen. Even in mild weather when tenfold ventilation is required, it would serve 72 men. With such a power at hand, there is now no excuse for ill-ventilated workshops, for all the risks of back-draught, and the irregularities and contrarieties of wind ventilation are overcome by the power Fan, which will give as much or as little air as you require by the simple regulation of its speed.

The Fan should be fitted to the outlet, as it is difficult to disperse its violent draught when used on the inlets, and as only one outlet is best for each room, there is the one place for the Fan. An outlet shaft, as already described, will be required, as the Fan cannot advantageously discharge through a side opening, which may meet the pressure of strong wind at times. Sometimes, where dust has to be kept down, and has to be carried away from lathes, &c., it is convenient to use the space under a boarded ground floor, as the exhaust chamber leading to the Fan. Each lathe, &c., having an exhaust pipe through the floor, and one or more pipes being led down from near the ceiling, to carry off the gas fumes, &c.

The speed of the Fan may be regulated by stepped pulleys, like a lathe, or by cone pulleys and belting, or by curved cone friction pulleys, like a potter's wheel.

A readier way of checking the draught is by a valve in the discharge shaft, either a throttle valve, or a return escape valve; but in these cases the Fan has the wear and the power of full speed at all times, while the speed regulation economises both wear and power.

This regulation of the whole room should be controlled by the foreman, but the separate air-inlets may be left to the men near them.

In selecting a Ventilating Fan, its specially light work must be remembered. The high speed Blast Fan is utterly wasteful as a ventilator, and the best forms have very large airways throughout, with little frictional surface, fine cutting edges, and truly curved vanes, so as to lightly pass a great bulk of air.

These principles are ignored by many makers of Fans, the result being that many are in the market which show only from 30 to 60 per cent. of the efficiency of the best designs; and though I believe we have not yet seen the best possible form, I feel warranted in saying, as the result of several experiments, that the "Blackman Air Propeller" is a long way the best Fan I have yet seen for light work, but it will not do well for more than 1in. of water pressure, and so is unsuitable for blast purposes.

Where blast pipes have to be laid throughout a workshop, it is sometimes convenient to use the blast pressure for ventilating, by means of a blast jet, or set of jets, in the outlet shaft, working like the blast pipe in the funnel of a locomotive.

Steam jets may be similarly used, but such non-economical appliances are best suited for sudden requirements, during the cleaning of fires, machines, &c., rather than for constant ventilation.

Where ventilation is thus forced, it is not needful to have so large outlets as those recommended for natural ventilation, but it is well that the sizes of outlets and shafts, &c., should be arranged for an air speed not exceeding 600 lineal feet per minute.

The inlets should be, as already advised, arranged for a speed of about 200ft. per minute, to avoid strong draughts.

In this description of ventilating appliances, I have not yet referred to the Heating Appliances shown on the diagrams referred to, and but little description of them will be required. I show hot-water pipes of large diameter, as the small-bore hot water system is not, in my opinion, suitable for workshops. Where steam pipes are used they might be of the old-fashioned large size, low pressure arrangement, where waste steam is available; or preferably of the small size, high pressure arrangement, with return pipes to the boiler. Ready means of regulation should be provided, so as to shut off the heat when gas is lighted, or from hour to hour as required.

In order to warm the cold draughts from the air-inlets, the heating pipes should be looped or fitted with "gills" or flanges opposite each inlet, and it is well to counteract the cooling effect of large windows by loops of heating pipe round them.

I must now pass on to the subject of

LIGHTING BY DAYLIGHT OR ARTIFICIAL LIGHT.

No rules can be given as to the extent of window or skylight area required, as it depends so much on the particular class of work, but it is good policy to provide plenty of glass in any workshop.

What I wish to urge is the importance of selecting suitable glass, avoiding the very rough surfaced kinds often used, and selecting either thick sheet glass or rough plate glass; this last having the advantage of being much warmer than thin glass.

The cleaning of windows and skylights is most unwisely neglected by many engineers, who thus incur heavy gas bills, and make their shops perpetually dull and unhealthy from sheer thoughtlessness. A little calculation would soon prove that the cost of frequent window cleaning would be well repaid by the comfort and gas economy resulting from it.

Skylights collect dirt even more than windows, and should always be arranged with ready means of access for cleaning.

As to Artificial Lighting, time will not permit my attempting to deal fully with it, but in relation to the economy of health I may point out the importance of using good gas-burners which give the best light for the gas used; since the use of inferior burners discharges half-burnt gas into the room, and by giving inferior light materially taxes the sight and ultimately the health of the workmen.

The Electric Glow Light seems to me the best for nearly all lighting purposes, the Arc Light being as yet too unsteady for long continued use.

Where much gas light is used care should be taken to provide adequate ventilation for the time of use only, estimating one ordinary burner to require as much air as four men. So if each man has one gas burner, five-fold ventilation should be used whenever the gas is lighted.

Passing on now to the subject of

WATER SUPPLY, DINING ROOMS, &c.

I must again remind you that your "property has its duties as well as its rights," and certainly one of the duties is to provide

good drinking water for your men, and also reasonable accomodation in the way of "steam kettles," "hot hearths," "steam ovens," &c., to enable the workmen to make the best of their scanty supplies of food.

When one sees during meal times the men from some large works loitering round the nearest public house, or sheltering against the walls in the streets, it is evident that an economy of their health and strength would be effected by the master who would provide them a really comfortable dining room. Indeed, I am inclined to go still further, and venture the opinion that in every works good washing accomodation should be provided, and that a moderate outlay in engineering papers and illustrated newspapers, would so cultivate the men's power of understanding drawings, and so add to their interest in engineering work as to well repay its cost.

Passing now to the last division of my subject,

SEWERING AND WASTE APPLIANCES,

I think all will agree with me that the abominably filthy condition of the yards and closets of many engineering works is really disgraceful to the owners, and must be injurious to the men.

Let us go to the worst part first, and see what should be done to make the closets reasonably decent and cleanly. I know that some employers intentionally make them too much exposed and inconvenient in order to deter men from idling there; but I think no industrious fellow was ever yet led into idle habits by a comfortable closet, and no idle fellow was ever cured of idleness, though he might be made to idle somewhere else, by an inconvenient closet.

The right policy is to encourage habits of cleanliness and decency everywhere, and not risk a man's health, and offend his decency whenever he visits the closets.

If Tub Closets are used, care should be taken to avoid leaky tubs, and to fit them closely up to the seats. The floor of cement or flagging should be well sloped to a gutter, and the partitions should be kept six inches above the floor to facilitate washing it.

Trough Closets are the cleanest and best apparatus where sewers are available. Those made of strong earthenware, with seats like thick rounded pipe ends, and with self-discharging syphon flushing cisterns, are thoroughly satisfactory and give little trouble.

Privies with middens are unsuitable for works, but where used should have the midden protected from rain and drained, so as to be as dry as practicable, thus hindering putrifaction. If someone could be set to throw a covering of earth or ashes over the surface each day it would tend much to improve the place. The walls of all such places should be lined with brown salt-glazed bricks, or else well painted in dull colours. Glazed white bricks are better, but fully twice the cost.

Ample light and ventilation, without due exposure to the weather, are, of course, needful for health and comfort.

Urinals are best faced with slate, on account of its impervious and smooth surface. Flags or brick walls should be well coated with pitch, laid on hot, to form a good surface, and this can easily be renewed when needful.

The waste grids and surface water grids should all be set in stone or earthenware dishes, with glazed earthenware "gullies," or traps underneath. Iron traps are objectionable on many grounds.

Of course, no sewer opening at the surface should be left untrapped, for if so, dangerous gases could freely escape and do injury.

It often happens that blow-off pipes from boilers, or other such fittings, are turned into the sewers without trapping, but this should never be done. Roof pipes, when not too low, may well be connected directly to the sewers to act as ventilators.

It is a very good plan to have a manhole built on the sewer where it leaves the works, so as to give the means of seeing the condition of the sewers at any time, and of clearing them if required. At the outlet side of this manhole a syphon pipe should be inserted, to prevent the public sewer emanations from entering the place, and a vent pipe should be carried up from the public sewer to some convenient height.

Time compels me to end my paper, though there are many more points which I should like to touch on. So, in conclusion, let me put a consoling calculation before anyone who thinks that I have advocated wasteful extravagance rather than true economy.

I think the most unobservant would admit that by proper attention to health in the workshop any man now working in an uncomfortable and unhealthy shop might be made at least one per cent. abler, more active, and more efficient in his work.

Taking an average workman to be worth £100 a year to his employer, this 1 per cent. is £1 per year, or equal to £20 of capital.

All that I have suggested would not cost £20 per man; in most shops not £5 per man; so I hope that both on the low ground of mere money value, and on the high ground of duty to those dependent on you, my paper may convince you of the true "Economy of Health in Workshops."

DISCUSSION.

The President, in opening the discussion, said he was sure if they viewed the subject from the lowest, that was to say the mercenary point of view, it was greatly to their advantage to study the economy of health in reference to their workmen, since they all knew of the serious inconvenience and loss arising through absence of the men, when it might be work was most pressing. Employers, in his opinion, might often contribute to the comfort of the workman with very little exertion on their own account. The question of ventilation was a very important one, and perhaps it was only when the sun's rays penetrated into the workshop that they really perceived those metallic dust particles which were so very injurious to the respiratory organs, and which were rendered all the worse in places where there were mud floorings. The question of holidays was closely connected with the subject of health, and certainly, to his mind they were taken in a very fitful fashion, since it was rather sad to see at times that the men who were most in want of

recreation in many cases lolled about the workshops, not having the means to go away when any holiday occurred. A short time since he was reading a paper by Dr. Nichols, surgeon at Southport Infirmary, who strongly advocated the formation of what are termed Sanatoria. These were a kind of convalescent homes, or rather hydropathic establishments, where workmen in ill-health might be sent to in order to recuperate themselves. The probable cost of maintenance at such an establishment would only amount to about eleven shillings per week, so that it would pay the various trade societies to send a man there to regain his health quickly, instead of him being compelled to stay at home for a much longer time, and consequently be a still heavier burden on their funds. Such a scheme he thought was worthy of the encouragement, not only of all employers of labour, but of everyone interested in philanthropic work.

Alderman Asquith fully concurred with the remarks of the lecturer with reference to the inefficient ventilation of workshops, which he said was very much neglected. He was of opinion also that if ventilation in private dwelling houses was carried out in a more systematic manner, and more attention paid to the construction of the chimneys, which he maintained were in the majority of cases too low, a very sensible diminution in our death-rate would result.

Mr. Settle admitted the difficulties of ventilating large buildings by natural means and the necessity in most cases, of adopting artificial ventilation. With reference to the fan system referred to by the lecturer, he said he had had frequent opportunities of seeing it in use at the Royal Courts of Justice and other places. At the former place it had proved itself inefficient, and the ventilation was now obtained by an induced current, by means of a small blowing engine. The compressed air was carried in pipes under pressure, and discharged through a small conical nozzle, which induced a current, and he believed the results were very satisfactory.

The President asked if anyone could give any information with reference to the "Lucigen" light.

Mr. Lawson thought the "Lucigen" light was unsuitable for the workshop.

Mr. J. Bates said he had had a little experience with the light alluded to, and in the foundry found it to be far preferable to the use of gas.

Mr. A. Rea said he might mention for the information of the meeting that at the Amalgamated Trades Union Congress, what was termed the Parliamentary Committee, sent a circular to all the workshops in the kingdom for any information with regard to what was the state of ventilation and sanitation, so as to embody the same for presentation to members of Parliament, in order to influence the Government in its legislation on that subject. Speaking for himself, he admitted that Government inspection was not the best remedy for all evils, but he thought that the Corporations of our large cities and towns might certainly be trusted with more powers to look after the ventilation of dwellings and workshops, as well as superintending the construction of streets. He was afraid that at the present time competition was so keen employers only had the idea of getting the most out of their men at the least possible cost. He was sorry that the question of health was not more to the front, but as a workman himself he could testify that the lecturer had not overdrawn the advantages which accrued to an employer through contributing to the health of his workmen.

What he desired however, in these few remarks to emphasize was, that if left to voluntary effort very little would be done on either side to develope a better sanitary or ventilating system in workshops, and therefore he was decidedly of opinion that some compulsion was necessary to carry these into effect.

Mr. Joseph Nasmith said he had great pleasure in moving that a vote of thanks be given to the lecturer for his admirable paper. Mr. Corbett was a well-known authority on the subject, and therefore any remarks coming from him in that special connection came with exceptional value. Although possibly some of his statements might be open to question, yet on the whole the general tenour of the paper was one which would be

likely to lead to good results if it were studied and valued. He (Mr. Nasmith) could not help thinking however, that after all what had been said, the whole question resolved itself into one of time. He did not think they would find any flagrant disregard of either the ventilation or the sanitary question in the later workshops that had been built either in this or any other city. Of course, in workshops which were carried on in some old building he admitted the sanitary question might be utterly disregarded. They must not forget however, that the number of such places would gradually become less, and that time was working on the side of the sanitarian, because that subject was constantly being impressed upon the public. Architects in designing buildings, in most cases had it fully in their mind, and although they occasionally might do stupid things, yet on the whole the tendency was decidedly in the direction of the reformation both of sanitation and ventilation. Therefore, although pressure might be brought to bear upon the owners of workshops, he did not think it should be done by any public body. He had a great aversion to Government interference, because he was of opinion that it was so stupidly managed and administered in such a wooden sort of way, that really it set up a number of evils which were almost as bad as those it attempted to crush. Under the circumstances he thought the best way was to cultivate public opinion on the subject, and thus endeavour to bring pressure on the owners of workshops to put them in a satisfactory condition.

With reference to the question of lighting, Mr. Nasmith was of opinion that when the clause in the Electric Lighting Act which gave corporations power to compulsorily acquire the plant of any central lighting company, was expunged, electric lighting from central stations would come to the front. He did not think the "Lucigen" light was really going to be the light of the future for workshops. He rather thought that the large glow lamps, recently produced by Mr. Parsons, of Gateshead, would be more applicable in every way, since they gave a candle power of 300, and lasted 200 or 300 hours at a comparatively trifling cost.

Alderman Asquith seconded the motion.

Mr. Boswell, in supporting it, pointed out that there was a difficulty in the ventilation of some workshops, as they had to be built for special purposes. Architects and ventilating engineers were still so much disagreed about the most suitable methods, that it was difficult to say what was the best course to adopt.

The resolution was passed with acclamation.

Mr. Corbett, in replying, said he fully endorsed all that had been said in reference to Sanatoria for working men, and although the subject came hardly within the scope of his paper, yet he gladly owned that it was well worthy of the attention of masters, and especially of the trade unions.

He concurred with Mr. Asquith's remarks on the laxity of ventilation in dwelling houses, and was even inclined to speak more strongly on the subject, since he found while following his vocation as a sanitary engineer, that clients although anxious to take advice as regards sewers and drains were utterly indifferent to the equally important matter of having a supply of pure air.

With reference to the advisability of having compulsory powers to enforce proper ventilation, it appeared that Mr. Rea was in favour of some such powers, while Mr. Nasmith took the opposite view. They must acknowledge however, in taking a retrospect during the last 20 or 30 years, that compulsory legislation in the regulation of factories, mines, and shipping, had been beneficial in many respects. His own feeling was that they should have compulsion for those who were so unwise as to need it, and of course to the prudent and well-thinking no compulsion would be necessary.

He certainly could not agree with Mr. Nasmith when he expressed the opinion that in later built workshops every attention was paid to sanitary and ventilating requirements. He was aware that windows were constructed to open and doors to close, but it was generally in such rough and ready ways as might be more productive of evil than good. His impression was that the business of sanitation and ventilation was very

properly a business for specialists, and he might mention that in some cases it was the custom of the architect of any building to make a definite arrangement that a particular specialist should be the consulting sanitary engineer.

In reply to Mr. Boswell's remarks, he could only say that the more special the trade the more need for special arrangement of ventilation. At the present time it was perfectly possible for effective ventilation to be made for any trade, so that it might be carried on without danger to the workmen engaged in it.

He would like to say that the dust from many kinds of mills and especially the dust from grinding stones and from the sand used in moulding, in consequence of getting into the lungs was productive of consumption. From careful statistics it had been proved that by efficient ventilation many of the most noxious trades had been rendered comparatively harmless, and the workmen could work with a fair chance of an average duration of life before them.

Concluding, Mr. Corbett said that one of the speakers seemed to think that some of the suggestions were a little impracticable, and that attention to workmen and cleanliness were antagonistic to competition and economy. Well, he could only say that the whole purpose of the paper was to show that economy of health was a financial economy. He trusted, therefore, that they would carefully consider his remarks that they might be convinced—as he himself was—that in putting their workshops in good order and making the men comfortable they were not only doing good to their men, but also to their pockets, and in fact doing good in every sense of the word.

THE E

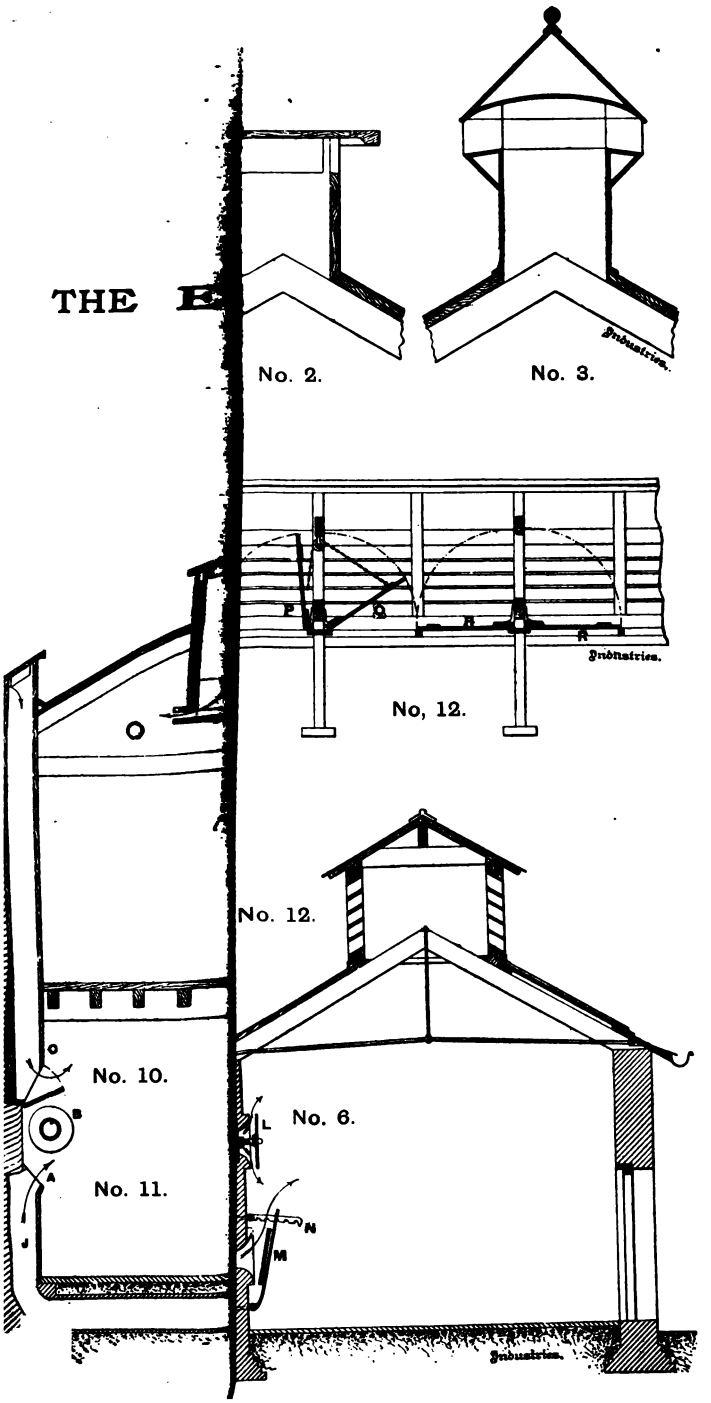
No. 2.
No. 3.
Industries.
P
Q
R
R
R
Industries.
No, 12.
O
No. 12.
O
No. 10.
B
No. 11.
A
J
L
C
No. 6.
N
M
Industries.

THE NEW YORK
PUBLIC LIBRARY

ASTOR BOOK AND
THE INSCRIPTIONS

THE NEW YORK
PUBLIC LIBRARY
ASTOR, LENOX AND
TILDEN FOUNDATIONS

THE ANDERTON HYDRAULIC LIFT.

A PAPER

READ BY

MR. LIONEL B. WELLS,

M.Inst.C.E.,

On 25th FEBRUARY, 1888,

AT THE GRAND HOTEL, MANCHESTER.

MR. SAMUEL DIXON, M.Inst.M.E., President,

IN THE CHAIR.

MANCHESTER:
HERALD & WALKER, PRINTERS, BACK POOL FOLD, OFF CHAPEL WALKS.
1888.

OFFICERS.

1888.

President:

MR. SAMUEL DIXON, M. INST. M.E.

Past-President:

MR. ALDERMAN W. H. BAILEY, J.P.

Treasurer:

MR. HENRY MAINWARING.

Trustees:

MR. E. ASQUITH, MR. G. CARTER, MR. R RAWLINSON
MR. JAS. WALTHEW, AND MR. T. ASHBURY.

Council:

MR. C. FARMER,	MR. J. HARTLEY,
,, S. BOSWELL.	,, J. HORSLEY,
,, W. TAYLOR,	,, W. LAWSON.

Secretary:

FRED. WALTHEW,
31, Shrewsbury Street, Old Trafford, Manchester.

Assistant Secretary and Librarian:

FRANK HAZELTON,
15, Raglan Street, Hulme.

THE ANDERTON HYDRAULIC LIFT.

It is a matter of satisfaction to me that I do not come before your Society as a stranger, nor is the subject I am about to describe a novelty to many of the members, for when I was Engineer to the Weaver Navigation you paid a visit to Northwich, and among other objects I heard of none that afforded you greater interest than the Hydraulic Lift at Anderton. This was not a matter of surprise, for it is one of the best examples of mechanical engineering that I have ever heard of, and both in design and workmanship is a credit to all connected with its inception, its design, as well as its execution; I do not mean to infer it is perfect. We cannot hope to be absolutely perfect in our work, still less can we expect this when we see a great departure made from the beaten track, which long experience has taught to be a safe one, but unless we adopt the proverb "nothing venture, nothing win," our progress will be brought to a standstill, for the order, "as you were," may be useful on occasions, but will not win industrial battles or enable people to maintain the position "as they were" in these days of rapid and far-reaching improvements in mechanical science.

The interest aroused by the construction of the Lift has been more keen abroad than in this country. Engineers have visited it from Canada, the United States, from all European countries except Spain and Turkey, and have evinced the greatest interest in the Lift. Papers have been written and correspondence carried on to a much greater extent than people at home are aware of. The great American Engineer, Mr. Eads, whose loss the engineering world has lately had to deplore, the man who was the first to build an arch of 450ft. span to bridge the Mississippi at St. Louis, and who by deepening the mouth of the Mississippi ensured a draft of 27ft. where formerly there was a doubtful 13ft., and by so doing increased the export of grain from New Orleans forty-fold, came on two separate occasions to see the Anderton Lift, with a view to adopting the

principle on a much larger scale for his Tehuantepec-ship Railway. Perhaps Mr. Eads' name will be more familiar to you as an opponent of your great Manchester Ship Canal undertaking. In that fight Mr. Eads was on the wrong side, but nevertheless he was, in my opinion, one of the greatest engineers and most enterprising men of this generation. And I look upon his approval of the Lift at Anderton as one of the best certificates you could possibly have of its value. I felt therefore the interest evinced by your members was worthy of bearing fruit, and as a gentleman who had contemplated a paper on the subject did not accomplish his good intention, when asked by your Society to prepare a paper for consideration during this session I had very little difficulty in proposing a subject, for I felt sure this would interest you.

I need not tell you much about the River Weaver Navigation and its Trustees, as lengthy notices have appeared from time to time in your city papers, when various Societies meeting in Manchester or Chester have usually come to see the Weaver; and no wonder, for I look upon the Weaver as the foster-mother of the Ship Canal, seeing that the chairman (Lord Egerton) graduated in the art of inland navigation as a trustee of the River Weaver, and the engineer, my friend, Mr. Leader-Williams, took honours in the same school.

When Mr. Williams was called upon to devise a means for increasing the usefulness of the Weaver Navigation, which having its outlet into the Mersey at Weston Point, passes through the salt districts of Northwich and terminates at Winsford, twenty miles from the entrance docks, and there ceases to be navigable, after much cogitation he hit upon the idea of a Lift to raise boats afloat from the Weaver water to the level of the Trent and Mersey Canal, the line of which canal runs within 50 yards of an arm of the Weaver at Anderton but is at a higher level by 50ft. 4in., and by this means to make a workable connection with a canal system to the Staffordshire Potteries, extending further to the Humber, and through Birmingham, to the Thames, and the Severn.

When it was decided to connect the Weaver Navigation with the Trent and Mersey Canal various means might have been adopted, and were no doubt duly considered by Mr. Williams.

The common-place method would have been by a flight of locks. This would have entailed much expense, much expenditure of time to the traffic using them, as is evidenced by the working of the locks at Runcorn, where very much the same lift is made by a flight of locks 11 in number, and further a great loss of water, which the Canal Company would not have agreed to, and therefore this means was out of the question. Incline planes are occasionally employed to overcome the difficulty, which they do to some extent; the most important one, however, on the Forth and Clyde Canal is used for empty boats only, the laden boats using the locks alongside. Mr. Williams took a new departure, and having made up his mind that the proper means was to be found in the application of hydraulic power and a single ram, he put himself in communication with Mr. Edwin Clark, who had been Resident Engineer for Robert Stephenson at the Britannia Bridge, and subsequently Engineer of the Victoria Lifting Docks, and also the Malta and Bombay Lifting Docks, in all of which ships of great burthen are raised out of the water for graving. We thus trace back the history of the rams at Anderton, 3ft. in diameter, with a lift of 50ft. 4in., which lift has been accomplished in 2½ minutes, to the presses employed in lifting the tubes of the first great wrought iron bridge ever built. I have been favoured with the following particulars of the presses used and work done at the Britannia Bridge by Mr. Latimer Clark, who was employed at the time under Robert Stephenson:—"The total weight lifted of the four larger tubes was 1,914 tons each. At the central towers a pair of 16in. Hydraulic presses were used, and the weight which came on them was 921 tons. At the fore-shore ends a single press with 20in. ram and 6ft. effective stroke was employed, and the weight at this end of those tubes was at times as great as 1,144 tons—this occurred when lifting the junction pieces through the towers, which were riveted on to the tubes after they were raised and had to be lifted in order to prepare the bed. This load gave a strain of nearly three tons per circular inch on the large press, equal 3.82 tons per square inch. The metal of the press was cast iron, 6in. in thickness, and the weight of the press 13 tons 16 cwts. One of these presses broke and allowed the tube to fall about 7 or 8 inches, sinking on to a bed of oak

planking placed underneath to receive it in case of accident. The bottom was of a somewhat square section, and the bottom came clean away in one piece."

"In designing the new press no alteration was made in the thickness of the metal, but the form was changed so as to be more nearly circular, and it did its work perfectly. The hydraulic tubes through which the water was fed were ⅜in. internal diameter, and the 6ft. stroke was made in from 35 to 45 minutes; 816lbs. of water was required for one lift. The ratio of the area of pump to cylinder was 1:354·3in."

The great departure suggested by Mr. Williams was to employ a single ram of such size and of sufficient power to raise a tank or caisson capable of taking two narrow boats or one Duker, that is, two boats with a cargo of 30 to 35 tons each, or one boat carrying 70 tons, the requisite height, and in order to prevent damage to the boat to effect the transfer afloat. To enable this to be done it was necessary that the caisson should be 75ft. long, 15ft. 6in. wide, containing a depth of 4ft. 6in. of water, which made up a load of 240 tons. The engine power necessary to lift this at a moderate speed would have been costly not only to provide but to work, and to facilitate the circulation of traffic and provide a ready means of elevating it, the decision was come to that the Lift should be double, and by lowering the descending caisson with 5ft. depth of water in it, whereas the ascending one contains 4ft. 6in., sufficient weight is provided to lift the lighter one to within 3ft. 6in. of the top. Meanwhile the engine raises an accumulator, which is then brought to bear and complete the operation. As a matter of fact the accumulator is employed twice during the operation, at the commencement to lift the lower caisson out of the water, and start the self-acting syphon arrangement by which the depth of water in the ascending caisson is regulated, and again at the completion when it is essential, owing to the descending caisson becoming waterborne. This accumulator has a ram 1ft. 9in. in diameter, 13ft. 6in. stroke, and has a capacity equal to that of one of the main rams for a stroke of 4ft. As already stated the main ram is a single one 3ft. diameter, and is of cast iron 1¾in. thick, cast in 3 lengths; a star of girders is fixed at the head of this and supports the caisson, which is of wrought iron, the sides being

9ft. 6in. deep. The presses, of cast iron 3ft. 6½in. external and 3ft. 1½in. internal diameter, giving a thickness of 2 inches, are sunk 65ft. below water level, where they rest on a concrete foundation covered with two layers of planking each 4in. thick, The presses are contained in cast-iron cylinders, 5ft. 6in. in diameter, 1½in thick, through which they were sunk. The press head was of cast iron, 3ft. 1½in. internal diameter, 2⅞in. thick, having a lower flange 6ft. 1½in. diameter, which rested on the cylinders containing the press, the upper flange being 4ft. 1in. diameter, the sides were strengthened by eight stiffeners 1½in. thick, extending from the lower to the upper flanges. The orifice through which the pressure was applied was 11in. from the bottom of the press head and 5in. in diameter, with an additional thickness of rim of 2⅜in. into which eight ⅞in. screws were tapped.

The press heads are reached through a shaft and tunnel, and in this tunnel midway between the presses is a valve box fitted with a valve for opening and closing the communication between the caissons through pipes 5in. diameter. This tunnel affords access to the valve box, and to the glands of the presses and stuffing boxes for the adjustment of the packing, and for lubricating the rams. The weight of each trough with 4ft. 6in. of water is 240 tons.

Under the ends of the aqueduct are placed the valves for connecting each press with the accumulator by 4in. pipes, and also a 2in. waste pipe ascends to the valve house and passes into a valve box, by which the water in the press with which it is connected can be run into the aqueduct, a branch on each of the waste pipes contains a small safety valve, which lifts, should the caisson be raised too high and the water running to waste, stops the ascent of the caisson before any damage can occur. These pipes and valves, excepting those carrying the water from a steam engine to the accumulator, are all that are required to work the lift, and are controlled, by means of shafting and gearing, by one man in the valve house, who turns one of five wheels according as he wishes to open or close the valve between the two presses, to open or close either of the presses to the accumulator, or to let the water in either of the presses run to waste. The relative position of the wheels in the valve house is

the same as that of the valves themselves; so that the man stands, as it were, in the centre of a model of the lift. This man works the lift in accordance with signals from others whose business it is to bring the barges into and out of the caisson. The valve house is on the top of the aqueduct and commands a good view of the whole apparatus.

At the four corners of the caisson are cast iron brackets which slide in close proximity to cast iron pieces attached to hollow cast iron columns, which are fixed on concrete blocks. By means of the brackets any tendency to movement either longitudinally or laterally is checked, but owing to the great weight of the caisson and contents the grease on the slides is never disturbed. A lattice girder connects the top of the columns and carries a footway round the outer edge of the caissons. The waterway from the caisson when raised is carried over an arm of the river to the basin in connection with the Trent and Mersey Canal by a wrought iron aqueduct, 162ft. 6in. in length, in three spans, supported on cast iron columns. It is 34ft. 4in. wide and divided by a central web, thus forming an approach for boats to each caisson; the ends are closed by wrought iron gates lifted perpendicularly 7ft. 6in. by crabs and pulleys attached to the cast iron frames. The gates are counterbalanced and they are easily lifted, the water on each side being first levelled by means of a valve in the gate, a strip of indiarubber is fastened to the bottom and sides of the gates and the pressure of water forces it against a corresponding flange on the aqueduct and forms a watertight joint. Similar gates are fixed on each end of the caisson for closing their ends when the boats have entered or left them. One of the aqueduct gates is always lowered before the other is raised, so that a break in the passage of water from the canal into the caisson is provided for, and any irruption of water from the canal avoided. The difficulty in making a watertight joint between the movable caisson and the aqueduct was obviated by bevelling the end of the aqueduct which overhangs, while the end of the caisson projects. A facing piece of wood is bolted to the end of the caisson to match the end of the aqueduct, while to the latter a piece of circular indiarubber, 3in. diameter, is attached, and when the caisson is at the top of the lift the wood is pressed against the indiarubber

and a water-tight joint formed. The indiarubber used when the Lift was erected in 1875 is still doing good service, never having needed renewal.

We will now take a boat from the Weaver to the Trent and Mersey Canal. The outer gate on the caisson being lifted the boat enters and the gate is then lowered behind her. Seeing that a floating body displaces its own weight of water, the weight to be lifted after the depth of water has been adjusted by means of the self-acting syphons is invariable, whether a loaded or empty boat is in the caisson or not. These syphons are an important adjunct to the Lift, for the river varies in height from its ordinary level to 2ft. 6in. above this in times of flood, and so does the water in the caisson at the bottom; therefore unless this was regulated the operation would be stopped. In practice the accumulator is employed to raise the caisson out of the river and bring the syphons into action. The canal level varies but little, and the descending caisson containing 6in. more water is about 17 tons heavier than the caisson to be lifted. The valve is now opened and a connection made between the two caissons; had they been of equal weight gravity would have taken them midway between the upper and the lower level and no further, but the additional 17 tons raises the lighter one until the effect is lost by the immersion of the descending caisson. In the meantime the accumulator has been pumped up by the steam engine to the top of its stroke, and communication between the caissons having been severed, a connection is now made between the accumulator and the ascending caisson, which is then lifted to the level of the aqueduct, the doors of the caisson and aqueduct being opposite each other. Before the doors can be raised the space intervening must be filled with water, and the water level in the caisson brought up to the level in the aqueduct, that is of the canal, and then the doors having been raised the boat is free to pass into the aqueduct, the outer door is lowered and the inner door raised and the boat is free to pass into the canal. The lift has been done in 2½ minutes, and usually it takes 15 minutes to transfer a boat from the Weaver to the canal. This operation might be quickened by employing power to work the gates and capstans for hauling the boats in and out, but manual labour suffices for the traffic.

Mr. Leader Williams left the Weaver before the construction of the Lift was begun, and this work was carried out under the supervision of his successor, Mr. J. Watt Sandeman, who became Engineer for the Weaver Navigation. The late Mr. S Duer worked out the details and superintended the work for Mr. Edwin Clark. The contractors for the ironwork were Messrs. Emmerson, Murgatroyd & Co., of Stockport; the foundation and all other works being done by the Weaver Trustees. A paper was read before the Institution of Civil Engineers on Anderton Lift in 1876, and a discussion ensued from which valuable information is obtainable. The Lift was opened for traffic in 1875, and continued to work without let or hindrance until April, 1882, when an accident of a very serious nature occurred, fortunately attended with no injury beyond damage to one of the presses. The up river caisson had been raised to the top and the aqueduct gate lifted about a foot preparatory to levelling up the water in the caisson, for passing a boat from the aqueduct into the caisson, when a burst occurred and the caisson fell to the bottom. The water from the aqueduct rushed through the opening under the gate and into the descending caisson, forcing the stern of the boat against the gate and damaging the rudder, but beyond this and some trifling damage to the upper works there was no further injury to the boat or to the Lift. It was impossible to determine at what speed the caisson reached the bottom, but although the head of the press was burst the escape of the water from the press was regulated by the space between the ram and the press, the diameter of the former being 3ft., of the latter 3ft. 1in.; to this and the fact that the caisson dropped on to a water cushion its freedom from damage was due. A workman was in the tunnel greasing the piston at the time, and hearing a run of water looked round and saw a stream spurting from the connecting pipe and press, he turned to go, when a burst took place and he was carried off his legs but fortunately got to the bottom of the ladder, up which he scrambled. On pumping out the tunnel it was found that a side of the press had blown out, and the pressure pipe leading to it was cracked. In the investigation of the cause of accident and the subsequent repair of the Lift, I had the assistance of Mr. Leader Williams and Mr. Duer,

which lessened my anxiety and was of the greatest assistance to me. The Weaver Trustees further decided to employ the firm of Emmerson & Murgatroyd to make good the damage. In the first instance we determined to test the second press, and it was arranged that the additional weight required to bring up the pressure to 800 pounds on the square inch should be placed as a dead weight in the caisson. This was done by stacking 120 tons of iron in it, bringing up the total weight—when filled with 5 feet the ordinary working depth of water—to 360 tons, or 50 per cent. above the weight of the descending load under the ordinary circumstances of working. The test was commenced at 12-37 p.m., on the 6th of May, 1882, with a sufficient depth of water to make up the ordinary weight of 240 tons, giving a pressure of 530 pounds on the square inch, and water was run in at either end of the caisson by pipes. This went on steadily, the depth of water being increased about 18in., equal to 50 tons per hour up to 2-10 p.m., when the pressure was taken off and the tunnel examined, and at this time nothing appeared to have moved.

At 2-35 p.m. the depth of water in the caisson having reached 4ft., giving a pressure of about 700 pounds per square inch, the caisson sank steadily, and on pumping out the tunnel it was found that the packing from a joint of the pressure pipe had blown. This joint was re-made and at 3-48 p.m. the pumps were again set to work, and the caisson lifted up to the former mark, about 5ft. off its bearings. It was noticeable throughout the testing that there was a slight leakage, but whether this took place through the valves only or through some of the joints as well as the valves it was impossible to ascertain.

At 4-32 p.m. the water had risen to 4ft. 7in. in the caisson, at 4-50 p.m. to 5ft., and this being the full depth of water required the supply of water was stopped, and the caisson was held in its position for about a minute. Orders had been given to start the engine to lift the caisson about 5in. up to the original mark, when it descended rapidly. On pumping out the tunnel it was found that the top ring of the second press had cracked through the hole for the inlet pipe, the crack being about ¼in. wide.

It thus appears that the second press failed in the same place as the first, but the failure was of a very different character.

Firstly—The pressure under which it broke was half as much again in the latter instance. Secondly—Instead of a large piece of the side of the press being blown out, a single crack was found.

It was suggested by some persons that the failure of the press was due to settlement, either owing to insufficiency of foundation or to the disease prevalent in the Northwich district, abstraction of rock salt, and consequent settlement of the overlying strata, but as the two presses broke on the side next the central valve box, this could not be; it was also suggested that the leverage induced by the extended ram might have torn out the side of the press, but again the second press broke when only raised 5ft., so this idea was proved to be incorrect.

Before proceeding to repair the press it was determined to cast an experimental length of top press of cast iron, 2⅞in. thick, special care being taken as to the quality of the metal and mode of casting, and that this should be tested to destruction under hydraulic pressure. The orifice was retained 5in. in diameter, and the casting broke under a strain of 2,856 pounds on the square inch. The fracture was nearly perpendicular through the centre of the inlet passing to bolt holes on either flange. This satisfied us that we might continue to use cast iron, and that the orifice required alteration.

In comparing the strains upon the metal with other presses I am unable to discover a cause of failure. In the presses of the Victoria Dock the working pressure is taken at 2 tons per square inch; these have been at work since 1857, during which time only one out of 32 has burst, and this was owing to the valve in this press not being opened, and an undue weight which should have been distributed over many presses was thrown upon this one.

In the presses of the Malta and Bombay Docks, cast by Messrs. Emmerson & Co., which have been at work for longer periods than the Anderton Lift, the working pressure is 17 cwts. per square inch, and at Malta this is said to be often exceeded, none of these presses have burst. They are smaller in diameter and the metal is thicker and therefore not likely to be so sound ing, or to be so uniformly strained as the castings at on. I am informed that the Anderton presses were made

of the same mixture of iron as was used in the Bombay Dock presses, and that two presses 12ft. long were cast and burst as an experiment, and both stood 2½ tons=5,600 pounds per square inch.

Mr. Edwin Clark has prepared a table of particulars of various presses he has been connected with.

WHERE ERECTED.	Diameter of Ram.	Thickness of Metal in Press.	Internal Diameter of Press.	Working Water Pressure per square inch.	Tensile Strain on the Metal per square inch.	Stroke.
	Inches.	Inches.	Inches.	Tons.	Tons.	Feet.
Britannia	20	10 (cast iron.)	22	3·64	4	6
Conway	18	8·75 (cast iron.)	20	2·47	2·8	6
Victoria	10	5 (cast iron.)	11·5	2·0	2·3	25
Bombay	14	4·5 (cast iron.)	15·5	1·35	2·32	32·5
Malta	13	4·5 (cast iron.)	14·5	1·05	1·69	30·3
Anderton.....	36	2·5 (cast iron.)	37·5	·237	1·78	50·3
Fontinettes	78·74	2 steel	80·2	·17	3·41	4·3

While deciding to continue the use of cast iron for the press heads it was determined to alter the form of the casting and to diminish the size of the orifice, for it was evident that the abstraction of metal to the extent of 5in. was a mistake, and that the method adopted to endeavour to compensate for this loss, viz., by thickening up around the orifice was likely to produce a bad casting where it was most important that the metal should be soundest. The size of the orifice was fixed at 2in. diameter, the number increased to four, and the 5in. pipe was led into a steel box for distribution, four steel pipes, 2in. diameter, ½in. thick, are run from this to holes drilled at various levels and on different positions on the side of the press head. The metal of the press was cast 3¼in. thick, and the large bottom flange and side stiffeners of the original press head were abandoned. The two presses at Anderton having been thus repaired have continued to work satisfactorily from that time forward.

In the table previously given the last Lift mentioned is that at Les Fontinettes, and by the kindness of Messrs. Clark, Standfield & Clark, the Engineers for the work, I am able to lay some further particulars of this Lift before you. It is constructed to supplement the existing canal system from the North

of France, including the ports of Boulogne, Calais and Dunkirk with Paris, and is situated at Les Fontinettes, near St. Omer, on the Neufosse Canal, where it leaves the level plains of the Pas-de-Calais and by five locks surmounts a height of 43ft. Owing to the congestion of traffic at this point the Government of France determined to double the canal accommodation there, and knowing by experience the delay in getting boats through the locks, which often occupies 2 hours, they looked for some better arrangement, and taking Anderton Lift as a pattern, determined on employing the Messrs. Clark to construct a somewhat similar Lift to accomplish their object. They decided on providing for barges of 250 to 300 tons burden, and for this purpose the caisson was made 131ft. long, 18ft. 6in. wide, and 6ft. 6in. deep.

The Lift is double. The rams are central, of cast iron, 6ft. 6in. in diameter, stroke 43ft. The presses are of steel tyres with a copper ring to ensure water tightness. So far the principle adopted at Anderton is followed, the dimensions of caisson and press being increased, but several important changes have been made in other particulars. At Anderton, owing to the immersion and consequent loss of effective weight of the descending caisson, it was necessary to employ some extraneous force to complete the operation, and an accumulator was provided for the purpose. At Les Fontinettes the caisson descends into a dry chamber, and consequently retains its lifting power to the end of the stroke, that is until the ascending caisson is at the level of the upper canal, and if all the joints and appliances were perfect this would always take place. As however, joints will leak, and appliances are not perfect, a small accumulator and pumps actuated by a turbine are provided for making good the waste from any leaks that may occur in the main presses, and this power is further employed to raise the gates, drive capstans for hauling craft in and out of the caissons, and other light work.

The press is of weldless steel tyres only with a stout upper lining, the rings are 6ft. 7in. internal diameter, 7ft. 1¼in external, and 5½in. deep. The water pressure is applied by a 10in. diameter pipe, which is taken to the bottom of the press were it curves upwards and enters from beneath the press.

The guides at the four corners are also dispensed with, and the caisson kept in place by central guides, placed on each side, which slide in a massive masonry tower, and it is further prevented from diverging laterally by guides in the end next the high level canal, which slide in cheeks let into the buttress of the aqueduct.

A much larger undertaking of the same kind is in progress at La Louviere, in Belgium, to connect the districts around Liege with that of Mons.

The Lift required is 295½ft. The first section is eight miles long, and the difference in level 75½ft. This is overcome by locks. The second section five miles long has a rise of 220ft. This is overcome by three double lifts of 56ft. each and one of 50ft. The length of caisson is 141ft., width 18ft., depth of water 8ft. 6in., diameter of rams 6ft. 6¾in., to accommodate vessels of 400 tons displacement (total weight lifted 1,100 tons). The cylinders are formed of nine lengths of cast iron hooped with steel, each length measures 6ft. 9in. internal diameter, 6ft. 6¾in. in height, 4in. thick. When tested, according to *Engineering* of February 25th, three lengths failed under a pressure of 2,175lbs, 2,280lbs, and 2,190lbs. respectively.

It was then decided to hoop the press with steel, and subject this to a water pressure of 2,265lbs. per square inch, when the cylinder was found to expand between the hoops in a barrel-like form. The press was therefore hooped continuously, the hoops having a thickness of 2in. and a depth of 6in.

The two presses are connected by a pipe of cast iron, leading straight across from one press to the other. This does not enter direct into the presses but into a circular pipe 10in. in diameter surrounding the top of the press, and from this circular pipe numerous pipes lead off direct into the press all round it, these are 2⅛in. diameter.

I am informed by Mr. Latimer Clark, who has been kind enough to give me information on various points, that the Lifts at Les Fontinettes and La Louviere, although not yet open for public traffic, are practically finished, and that boats have made the passage by them.

I am very glad to see that the example set at Anderton has at length been followed elsewhere, for I think it is self-evident that under many conditions, and especially if an entirely new waterway had to be laid out, the system of Hydraulic Lifts would be found superior in every way to any other system hitherto adopted for taking cargo-carrying vessels over heights intervening between places which it is desirable should be connected by water communication.

DISCUSSION.

The PRESIDENT having complimented Mr. Wells on the excellency and value of his paper, remarked that the failures to which reference had been made, although unfortunate at the time, were very instructive to engineers; in fact they often gathered more information from failures than from successes.

Mr. T. DANIELS asked what sort of packing was used in the rams, and if there was any difficulty in keeping them tight. Further, if the essayist did not think the cylinder was too weak for the lift at the part where it broke away?

Mr. SAMUEL BOSWELL observed that it was somewhat peculiar that hand-plaited gasket wore better than machine-made packing, and asked if there was not more clearance now than there was when the hand-plaited gasket was in use, since any difference in that point would influence the wear?

Mr. WELLS, in replying to Mr. Daniels, said with reference to the thickness of the casting, that had it been a well designed one it would have been amply thick enough for the purpose. The mistake was in making too large an orifice, as also in having the stiffeners on the sides of the castings. In order to show that as long as things go safely people are apt to follow on a certain line without due consideration, without really investigating, *de novo*, whenever a similar problem presented itself, he might mention particularly the Britannia Press

where the orifice was ⅜in., and at the Victoria Dock the orifice was very small indeed. They were content in those two cases to move slowly, but when it came to the Anderton Lift, where speed was required, it was thought the simplest thing was to enlarge the orifice, and from the fact that it was made 5in. in diameter the great cause of the failure arose. The casting was not a perfect one, and no doubt the thickening of the metal round the orifice and in the stiffeners had a bad effect on the soundness of the casting when cooling.

With reference to the various packings used, Mr. Wells said that at first it was packed with hand-plaited gasket 1½in. square three turns, then one turn of 1½in. square indiarubber, followed by a fourth turn of gasket next the gland. This lasted 2½ years with an occasional screwing down of the nuts, when owing to the wear the gland had to be lifted and an additional turn of gasket was inserted, and so on for another year, when Tucks' packing having an indiarubber core and a coating of canvas was adopted. This packing was similarly treated to the first mentioned. Tucks' packing was not found so efficient, requiring frequent screwing down to keep it tight, owing to its want of elasticity. During this early period the rams were in excellent condition and very smooth. Since the presses were altered and the clearance increased machine-made packing had been used, the first tried was 1½in. square built up from a round core, Fig. 1. This lasted but a short time, and when once it commenced to blow was useless. A circular packing was then tried, Fig. 2, this became flattened and lost its elasticity, Fig. 2A. Afterwards a packing 1¾in. diameter of elliptical form was used, Fig. 3, it became square in the stuffing box. This has been known to wear 15 months with the addition of one turn. The packing having the smallest indiarubber core is considered the best. The turn of packing next the gland is found most worn.

Mr. Thomas Ashbury, in proposing a vote of thanks to Mr. Wells, said the paper read that evening was interesting to them, because it was one of the first experiments at applying the skill of the mechanical engineer to overcome the difficulties of level in the manner described. The Anderton Lift was a great example of mechanical engineering, and it had created

interest the world over. In the course of 18 years it had copied in various parts of the world, and in one rec erected in Belgium, the caisson of which was double the le of that at Anderton, they could lift boats of 400 tons we They would also soon see an increased application of principle in the case of the Manchester Ship Canal. Manchester Ship Canal scheme, he might say, owed no s debt of gratitude to Mr Wells for the very great enginee services he had rendered to it, when as Engineer to the E Weaver, he gave it all the support he could. Mr. Wells narrated some of the failures in reference to the Anderton and apropos of failures, James Watt, the great engineer, that if all of them in connection with the steam engine had l recorded, they would have had a more perfect steam en than was the case in his day. One feature about the Ande Lift was that it was indicative of great advances in its direct and there seemed to be no end to the continuation of system.

The President seconded the resolution, which was car with acclamation.

Mr. Wells, in acknowledging the vote of thanks, said he well satisfied with the way in which the paper had been recei It was some years since he first met the members of Association, and since that time he had taken a great inte in its proceedings. He was sure it was an Association wl did a large amount of good in various ways, and was well w the support of those who were admitted to its membership. far as the Lift was concerned he had given them a plain reliable account of its failures and successes, at least all t were known to him.

FIG. I.

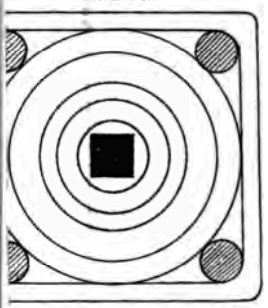

ARE PACKING WITH
BUILT CORNERS

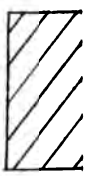

FIG 3

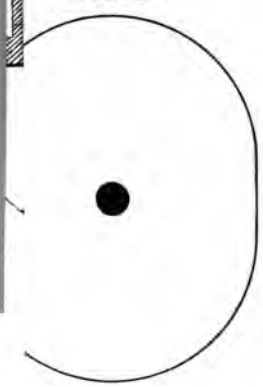

PUBLIC LIBRARY

THE NEW YORK
PUBLIC LIBRARY

ASTOR, LENOX AND
TILDEN FOUNDATIONS
R L

HE NEW YORK
BLIC LIBRARY

TOR, LENOX AND
BEN FOUNDATIONS

69

RING SPINNING MACHINERY.

A PAPER

READ BY

MR. JOSEPH NASMITH,

(Member of the Association,)

On 10th MARCH, 1888,

AT THE GRAND HOTEL, MANCHESTER.

MR. SAMUEL DIXON, M.Inst.M.E., President,

IN THE CHAIR.

MANCHESTER:
HERALD & WALKER, PRINTERS, BACK POOL FOLD, OFF CHAPEL WALKS.
1888.

front roller the roving passes through the wire eye D, fixed in a wooden board known as the "thread board" to the ring H, which is held by a suitable clip on a rail extending the length of the frame. The thread boards are arranged to be turned up simultaneously by means of the rocking levers F, and the connecting rods coupled with them, which are worked by a lever at the end of the frame. The spindle E is, in the machine shown, self-contained, and is fastened into a rail I by means of a nut. The top rollers are weighted by a saddle K, lever G and weight L, but this is not always the case. The spindles are driven by bands from the two tin rollers in the centre of the machine, and the building of the cop or spool is effected by the vertical traverse of the ring rail. The ring is approximately of the section shown in Fig. 4, and has slipped on to it the traveller. Without stopping to enquire at present the precise action of the latter, it is sufficient to say that the yarn is passed through the traveller on its way to the bobbin, and it is evident that as the ring is raised or lowered the yarn will be wound on the corresponding portion of the spindle. The vertical reciprocal motion of the rail H is obtained from the cam D (Fig. 2), which is keyed on the same shaft as the wheel C, driven by the worm B, which derives its motion from the main shaft A. Each revolution of D depresses the lever in contact with it, the weight of the ring rails and their attachments keeping the cam and lever in contact. The chain attached to the axis of the wheel F is thus unwound from the pulley G, which being fixed on a longitudinal shaft causes the latter to rotate. On the shaft small pulleys are keyed (Fig. 4) to which the ends of chains, the other ends of which are attached to the lower ends of vertical rods or "pokers" sustaining the ring rail, are fastened. It is a common practice to key levers on the shaft, the free ends of which come under the feet of the pokers. The rotation of the shaft obtained in the manner described thus raises the ring rail, the descent being obtained by gravity. As this reciprocal movement is only about 1¾ to 2 inches, while the length of the cop or spool spun is 5 or 6 inches, it will be seen that the ring rail must be slowly raised and a fresh starting point at each lift of the rail be obtained. This is effected by means of a ratchet motion automatically operated by the rise and fall of the lever. The rotation of the

ratchet wheel is communicated through a train of gearing to the wheel F, and the chain connecting F and G is thus wound on to the former and from the latter. In this way a limited rotation of the shaft to which G is attached is effected, and the lift of the pokers commences gradually at a higher point. This elevation of the ring rail is of course a very slow one, but it is always taking place, and the result is that a thoroughly well built cop is obtained.

The history of the ring frame is interesting, and keeping in mind the fact that a stationary annular ring is an essential feature of a machine of this description, no earlier date than 1828 can be assigned to it. In that year a patent was granted in the United States to one J. Thorp, who invented a ring somewhat resembling that in Fig. 6. The ring was in two pieces, and a groove was thus formed in which a solid hoop was placed. The yarn was conducted between the two rings and was drawn round the periphery of the hoop by the pull of the spindle. In the next year a patent was taken out in the United States by Messrs. Addison and Stevens, in which the first mention is made of a traveller.

The author regrets that it has not been possible for him to obtain drawings of these earlier arrangements as patented in America, as they would undoubtedly have been of interest. The first patent in this country was granted to Messrs. Sharp and Roberts in 1834, and in Fig. 5 is illustrated a sectional view of the spindle and ring. The spindle A was borne by the bolster B and by a footstep not shown, the warve or whirl being placed between the two. The copping rail C carried the ring D which was of the section shown, being fastened on to the top of the rail C. The traveller was formed from flat wire coiled round a rod and cut into short lengths for the purpose. The spindle carried a bobbin E which rested on a braid or disc on the spindle, and was positively driven by means of a pin in the braid which engaged with a hole or slot in the flange of the bobbin. It may be noticed here that all the essential features of the modern ring frame is found in this machine as illustrated by the drawings in the patent. The roller stand is inclined, the bobbin is positively driven, and the ring and traveller are identical in principle with those now used. The next patent in

THE NEW YORK
PUBLIC LIBRARY

ASTOR, LENOX AND
TILDEN FOUNDATIONS
R L

which an attempt was made to spin on the bare spindle, cops similar to mule cops. The special difficulties in the way of this will be hereafter referred to, but in the meantime a brief description of the invention will be interesting. The spindle A is of the ordinary type of mule spindle, and it has surrounding it the ring B attached to the copping rail C, to which the usual vertical movement is given. The specification states that the patentees had discovered that by giving the rail the necessary traverse by means of a cam of the requisite shape, "pin" cops could be very readily spun on this machine. The task was no easy one, and the firm with which the patentees were connected have recently produced a machine (to be hereafter noticed) in which the same work has been attempted. After the date of this patent, and indeed up to that time, very little practical attention was paid to ring spinning in this country. In America, where from the difficulties in the way of obtaining suitable labour, spinners were anxious to supersede the mule, the possibilities of ring spinning were more fully recognised, and it is in that country that its development took place up to a certain point.

In the year 1866 Messrs. J. and P. Coats and Messrs. Clark and Co., both of Paisley, and both having mills in America, introduced into this country short sample ring frames for the purpose of twisting sewing cottons, and in February 1867, Messrs. J. and P. Coats ordered from Messrs. P. & J. Mc.Gregor of this city, eight sample frames of 238 spindles each for twisting purposes. In May of the same year Messrs. Clark ordered from the same firm a sample frame, and during that and immediately succeeding years many repeat orders were executed by Messrs. Mc.Gregor. Messrs. Wm. Higgins and Sons of Salford, also made machines on the American pattern for the same firms and for the United States. In June 1867, Messrs. Mc.Gregor made for Messrs. Knowles of Burnley, a ring *spinning* frame, all those previously referred to being for twisting, and in October 1869, they made for Messrs. John Dugdale and Bros. of Lowerhouse, near Burnley, fourteen frames of 364 spindles each. The author is not aware of any earlier actual use in this country on a large scale of ring frames either for spinning or doubling. At the latter end of 1872 Mr. James Blakey, a representative of

Mr. Brooks, paid a visit to the United States and there investigated closely the use which was being made of the machine. It is extremely probable that shortly before this time accuracy of workmanship was being better attained in the manufacture of these frames, and at any rate the *renaissance* of this as a spinning machine began about 1866. Mr. Blakey very fully studied the machine in its original home, and he became so imbued with a belief in its possibilities that he advocated its modern use with great earnestness to Mr. Brooks, who was at once convinced of the future success of the machine, and began its manufacture with the energy for which he was noted. It was not however until the difficulties arising from the use of the ordinary spindle were overcome that the machine became unequivocally successful. This special point need not now be laboured as it will subsequently be dealt with in detail. It is worth noting, however, that the first extensive use made of these frames was for twisting and not for spinning.

The general description and history of the machine just given will convey a fairly accurate idea of its development, and the details of the machine can now be dealt with. In describing these, the principles underlying the mechanism will be touched upon, and it is hoped that an interesting discussion will ensue. The drawing rollers being common to all spinning machines no further description than that given need be furnished; but a reference to Fig. 4 will show that the roller stands, the thread board mechanism, and the relation of the spindle and ring are the chief points requiring explanation. It will be convenient therefore to consider these details in their order, and afterwards to deal with a few special points arising. As will be noticed, the roller brackets A are formed so that a line drawn through the axes of the rollers is at an angle with the horizontal. This has been found to be absolutely essential in order to obtain good work, and for this reason. As has been noted and as is well known, the number of turns per inch put into the yarn depends on the relative speed of delivery of the rollers and the revolution of the spindle. Now in order to ensure that the twist shall be put in the entire length of yarn from the spindle to the rollers, it is essential that no portion of it shall be held in any way by any part of the mechanism, but should be quite free to

receive the twist from the spindle to the nip of the front rollers. But if the rollers were in a horizontal plane, a certain portion of the yarn would be pressed against a part of the bottom roller for about a fifth of its circumference. This is detrimental, because the twist cannot run up to the nip of the rollers, but is remedied by giving the roller stand the inclination referred to. In a lesser degree the same evil arises if the yarn passes through the wire eye D in the thread board at too acute an angle. To obviate this, it is now the practice to adjust the brackets A so that the nip of the front rollers is almost vertical to the spindle. The amount of the inclination of the roller stands varies according to the class of yarn to be spun, and whether the rollers are self-weighted or are pressed downwards by saddle and weights. If for instance weft is being spun, the number of turns per inch being less in this than in warp or twist, and the yarn being correspondingly softer, the inclination is about 35° while in the case of twist it will vary from 25° to 35°. The thread boards are arranged as described to be lifted simultaneously by means of a lever, this being necessary when the frame is being doffed or stripped of its bobbins when the latter are full, the doffer being thus enabled to give a straight lift to the bobbin and avoid any straining of the spindles.

The chief feature is, however, the relation of the spindle and ring to each other, and their special construction. It is essential that the spindle should be so fixed in its sustaining rail as to be truly vertical, and when its construction is dealt with it will be seen how perfectly this is obtained. The ring must be attached to the ring rail so as to be absolutely concentric with the spindle, and on the actually efficient performance of this duty depends very largely the success of the machine. Bearing these two points in mind, it will be convenient to deal first of all with the special construction of the spindle. As would naturally be expected, the first form used for this purpose resembled a throstle spindle without the flyer, or a mule spindle, but eventually the shape adopted generally was that which is shown in Fig. 12, the bobbin being also very light. A good many modifications took place, but in every case the bobbin was pressed on to the spindle above the top bearing or bolster. In 1870, however, Mr. J. H. Sawyer,

of Lowell, Mass., patented the spindle bearing his name and which was introduced into this country under the name of the "Booth-Sawyer." The main principle of this form was the provision of a means by which the top bearing was carried up inside the bobbin, thus sustaining it at a higher point than had been before possible. Referring to Fig. 13 the bolster B is formed as a hollow tube extending upwards from the rail, and having at the upper end a phosphor bronze bush F which acts as the bearing. A spiral groove is formed in the bolster by means of which the oil, being fed at G and held in the chamber I, is carried upwards so as effectually to lubricate the spindle. Special provision is made for the footstep, and both bolster and footstep are supplied with covers. The Booth-Sawyer spindle is beyond doubt an efficient one and constituted a very great advance on those previously used. The position of the top bearing was higher than in any previous form, and it does not require any long comment to demonstrate the value of this improvement. It must be noticed however that it is necessary to oil every day, and that there are two bearings which are fixed in rails quite independently of each other. In spite of these defects, however, the Booth-Sawyer spindle has done, and is doing, excellent service in this country and elsewhere, and so far as output is concerned is quite equal to any other spindle in the market.

As has been previously stated, the most essential point in the successful construction of a ring frame is the preservation of the exact concentricity of the spindle and ring. If this is destroyed a very detrimental effect is produced, and it does not need to be pointed out that, where there are two bearings to a spindle each of which is attached to a different rail, the difficulty of preserving a correct vertical alignment is very great. For these reasons the introduction of the Rabbeth spindle into this country by Messrs. Howard and Bullough about the year 1874 led to its wide adoption, and the practical supercession of the Sawyer, and gave a great impetus to this system of spinning. The principle of the Rabbeth is that of the Sawyer so far as the position of the upper bearing is concerned, but it has the further merit of being entirely self-contained. The latter feature was not new in the annals of

British invention, as in a patent granted to David Cheetham in 1857, the spindle illustrated in Fig. 14 was included. In 1836 a patent was granted to William Wright, of Salford, which is illustrated in Fig. 22. The spindle is driven by means of a hooded warve A, and is borne by a bolster B, which is fastened into the rail C in some convenient manner. While the patentee intended to use an upper bearing above the top of the hooded warve, he also stated that this arrangement would enable him "to dispense with the support of the ordinary bolster rail, when it may be desirable to do so." A reference to the illustration of the Rabbeth in Fig. 15 will show that the invention of Wright had two of the points of the former, viz:—its self-contained mechanism, and the method of driving by a hooded warve. It is true that both these improvements are only indicated, and not fully worked out, but they are indicated, which for the present purpose is sufficient. In addition to these, in a silk mill at Renfrew occupied by a Mr. Gavin Pollock, a self-contained spindle made with a brass bolster had been working for a great number of years prior to 1857, but this use was not generally known. The first form of the Rabbeth spindle had the bobbin entirely above the bearing as the specimen exhibited will show. The first patent taken in America by Mr. Rabbeth was dated April 2nd, 1867, but on the 18th December, 1860, Mr. E. M. Steere patented in the same country a spindle which is almost identical with the Rabbeth spindle. In Mr. Cheetham's patent the spindle A has a warve B placed immediately above the fixed rail C. The rail C may have a number of tubes cast with it, being made deep for the purpose, the tubes forming the bearing for the spindle, the foot of which was sustained by the screwed piece E. The tube was bushed at F and it was oiled from a reservoir or chamber G in the manner shown. Provision was made for attaching the tube C to the rail by suitable means, in which case the rail is much narrower. As has been said the Rabbeth, like the spindle just described, is entirely self-contained, its construction being that illustrated in section in Fig. 15. The spindle A revolves in a case or bolster B made of cast iron which acts as a bearing for the spindle both at its upper and lower portions. The bolster is formed with a flange, as shown, and is accurately

turned and bored all over. It has its shank screwed with a fine thread so that when passed through the hole in the spindle rail, it can be firmly fixed in position by the nut shown. As the underside of the flange is quite square with the hole in the bolster, it follows that the spindle rail being planed on the top, the bolster case B will be in a perfectly vertical position. The spindle A is borne by a bronze bush at B, and by the bolster at E, the case being recessed so as to form a chamber containing such a quantity of oil that the necessity for lubrication more than once in six months is obviated. Fitting on the spindle is a sleeve with a warve or grooved pulley at its lower end as shown at C, the sleeve being bored with a conical hole and being tightly pressed on the spindle. The driving band passes round the warve and thus rotates the sleeve and consequently the spindle. A brass cup D is placed on the lower part of the sleeve, into which the foot of the bobbin is pushed, the upper part fitting the spindle as shown at G. In this way the bobbin is positively driven, and the pull of the band being low down, the spindle can be run at a high speed with great steadiness. The sleeve C is prevented from lifting by the hook F, which is carried in a small frame suitably pivotted so as to allow of the sleeve being removed easily when required. This device is a special one of Messrs. Howard and Bullough's, and is one of the best for the purpose. Various modifications of the Rabbeth spindle have been made, including the Dobson-Marsh, which provides for a readier means of oiling by taking off a cap at the lower end of the spindle and thus allowing the dirty oil to run away, this necessitating pumping out in the Rabbeth. In all essential features the Rabbeth may be taken as the best type of self-contained spindle, in which the spindle proper is sustained by rigid bearings, and one of its chief merits is that it can be readily adjusted so as to be quite true with the ring. As a matter of fact this was practically the only advance noticeable in the Rabbeth over its predecessors, and was not perceived even by its inventor until after spindles made under his first patent had been working some time.

During the past few years, however, a new type has been introduced of which there are now several examples. Every is aware of the tendency of a rapidly revolving body, such

as a humming top a little out of balance, to assume such a position that its axis is out of the perpendicular while its revolution is going on with absolute steadiness. The high rate of speed which is attained with ring spindles, running up to 9,000 revolutions per minute, produced as might be expected, a certain amount of vibration which it is desirable to avoid. Consequently a spindle was produced in America to which the designation of the "top" spindle was given, and which was, while held in a long bearing at the top of the bolster, free to move at its foot until it found its position of steadiness. It was found, however, that the changes of position when the balance was disturbed were so abrupt that it was necessary to restrain the movement to a certain extent. It is somewhat singular that in the patent of William Wright previously referred to, he makes provision for giving a certain amount of elasticity to the bolster bearing. In Fig. 22 will be found a drawing of his invention, and it will be seen that the bolster D was mounted loosely in the rail E. The collar F had a groove formed in it in which a leather washer G was fitted, also being placed in a circular recess in E, and kept from lifting by a ring H. The vibration of the spindle was intended to be taken up by the washer G. There is here a clear apprehension of the needs of the case, and an ingenious attempt to meet them. In Fig. 16, a spindle known as the "Whitin Gravity" is illustrated, being made in this country by Mr. Wm. Ryder, of Bolton. The spindle A has fitted on it the sleeve B, made shorter than usual. On B the warve is formed, as well as a conical shoulder on which the lever end of the bobbin fits tightly. The bolster D has the usual screwed shank and passes upward into the sleeve. A noticeable feature of the Whitin is the employment of a loose sleeve in which the spindle fits, and which has an external diameter at the point C about $\frac{1}{500}$ inch less than the internal diameter of the bolster at that point. The lower part of the sleeve is recessed so as to pass over a nipple G formed in the bolster, the size of the sleeve being such as to allow of its adjustment in any direction. On the top of the nipple G a small pad of cork is placed, the object of which is to limit by its friction the movement of the sleeve and spindle, and also to absorb vibration. The bolster is recessed so as to form a cavity E surrounding the tube D, in which the oil is placed,

finding its way to the spindle by means of small holes bored in D. The spindle does not therefore as in the Rabbeth revolve in oil, and any sediment which may be in the latter is allowed to settle in the cavity or recess H. The Whitin can be run without any difficulty at very high speeds. Another spindle in which this principle is used has been largely adopted, and is known as the "Ferguslie." The inner sleeve in this case has freedom of oscillation, which is controlled by a barrel-shaped spring placed round the upper part of the bearing. It may be noted that the lower end of the inner sleeve is quite free, and that the entire control comes from the spring at the top. There are many other forms of this type of spindle, Messrs. Dobson and Barlow for instance, employing a cork cushion in lieu of a spring. Mr. John Dodd, of Messrs. Platt Bros. & Co., Limited, has recently patented the spindle illustrated in Fig. 17, which the author is informed is running at a very high velocity and giving very good results. The spindle is carried in a tube or bolster A, formed with a rectangular nipple B at its lower end, in order to prevent its turning with the rotation of the former. The spindle C is formed as shown of a special shape, being strengthened above the top of the bolster so as to be stiffened somewhat where the bobbin fits. The main arrangement of the bolster case, sleeve, etc., is similar to the Rabbeth, but the bolster case extends upwards a little above the bolster, and on the spindle a collar D is formed by which the oil which works up above the top of A is thrown off so as to catch on the bolster case and run down again into the chamber which is formed at its lower end. The oil passes through holes in the bolster, thus providing for an efficient lubrication, and the latter is so fitted into the case as to be a little less than its internal diameter. It is probable that in working, A will be constantly surrounded with oil, which will form a pretty effective cushion. At any rate it is found that high velocities can be attained with this spindle combined with complete steadiness. In Fig. 18, the "Bee" spindle which is the invention of Mr. Geo. Bernhardt, of Radcliffe, is illustrated. This gentleman has given a good deal of attention to this special class of spinning machines, and is the inventor of many useful appliances in connection therewith. The chief feature of the Bee spindle is the formation

of the bearing in the shape of a long tube, which can be withdrawn from the bolster case and emptied of oil without disturbing the spindle. The tube is held in position by a bayonet catch, and can be withdrawn and replaced in a very short space of time. If desired the tube can be arranged to rotate as it is acted on by the revolving spindle, but this is not essential. It appears to the author that the use of a withdrawable tube is a very valuable feature. In passing it may be stated that the adoption of spindles with elastic bearings has led to a shortening of the driving sleeve, and a reduction of the height of the top bearing.

The ring, the use of which gives its name to the system, is made of the form shown in the various drawings and varies in diameter from one inch to five or six as required, two inches being a very common size. The diameter is, of course, determined by the counts being spun, the cop or spool produced being larger in proportion to the coarseness of the counts. The important points in a ring are its perfect circularity, smoothness of surface, and hardness, three features which tax the energies of manufacturers to obtain at the prices paid for these articles. Formerly rings were produced out of iron of good quality which was formed into a hoop and perfectly welded, but latterly steel has come largely into use, and it is the practice to obtain the blank without the use of a joint. The rings are in some cases milled and in others turned and bored to the required section, and are subsequently case hardened. A large percentage of the soft rings fail in the case hardening, and the production of a perfect article is only possible with a proportion of the blanks dealt with. In the great majority of cases the ring is made single, that is with one bead only, but Messrs. Thos. Coulthard and Co., of Preston, produce a double ring which can be reversed when needed. This firm provide a special holder for their ring, which is fitted on to the rail and is also formed with a vertical arm or projection which knocks the fly off the traveller as the latter revolves. The fly is the collection of loose fibres which are thrown off from the surface of the yarn in its passage to the spindle, and which if left adhering to the ring or traveller increases the drag and causes breakage. It may be said here that cleanliness is a most important feature, and requires

constant attainment if spinning is to be conducted successfully. A special lubricant is provided for the ring and traveller, ordinary oils being useless.

The travellers are, as previously mentioned, made of a C shape and are of various weights to suit varying circumstances. For fine yarns a light traveller is necessary, while for course counts or strong doubled yarn a proportionately heavier one is used. The diameter of the ring used, the number of twists per inch, and the speed of the spindles are among the things which influence the choice of the traveller used. It may be said that, although definite rules are made as to the weight of traveller used for certain counts under fixed conditions, a careful overlooker can make a vast difference in the production by selecting the exact size of traveller best adapted to particular yarns. A sample card or two of various forms, sizes, and weights of travellers made by Messrs. Eadie Bros. of Paisley, can be inspected, and tend to show the great variety of these useful appendages.

Having thus described the essential portions of a ring spinning machine, some of the difficulties and principles of the mechanism may be dealt with. It is quite certain that the full theoretical reasons for the successful accomplishment of this work are not now forthcoming, but an approximation to them is possible. The actual spinning process is merely a twisting together of the fibres of any material by the rapid revolution of a flyer or spindle while the fibre is being delivered at a definite rate. As it has never yet been accomplished to take off the yarn from the spindle at the same rate as it is being wound on, it is necessary that the twisted fibre should be collected on the spindle or on a bobbin super-imposed on it. In order to do this it is essential that the eye or guide through which it is delivered to the spindle should travel either faster or slower than any fixed imaginary point on the spindle. The latter is the invariable rule with the ring frame, and it will be seen that as the bobbin is revolving at a quicker rate than the flyer eye, or in this case the traveller, it will take up the yarn and gradually wind it on to itself. Of course in the case of a mule this does not happen, the winding arrangement being there altogether different. The amount of "lead," which the bobbin has, should correspond approximately

to the number of inches of yarn delivered by the rollers. That is to say, if the yarn is receiving ten twists to the inch, the bobbin should take up approximately, during ten revolutions, one inch of yarn. Now it is quite clear that if the velocity of the bobbin varies, the speed at which the traveller is pulled round the ring will vary also, but that owing to the resistance caused by its weight and frictional contact with the ring it will always tend to lag behind the bobbin. A little examination will show that the weight of the traveller is really the determining, or at any rate the most important, element in the case. As has been explained the rotation of the traveller is caused by the pull exercised on it by the yarn. Now the velocity at which ring spindles are revolved is very great, averaging in ordinary cases at least 8,000 per minute. It is quite clear that a traveller rotating at that speed will tend by centrifugal force to fly outwards, and thus cause its inner lip or edge to press against the inside of the ring. Although it is quite true that this contact is only a slight one it exists, and constitutes one of the elements in the case. But it is also evident that the greater the weight of the traveller the greater will be the force that is exerted against the inside of the ring. While the author does not wish to do more than express his own opinion in this matter, there seems to be substantial ground for belief that the tangential pull on the yarn between the traveller and the point at which it reaches the bobbin will to a great extent counterbalance the tendency to fly outwards. It therefore seems probable that the reasonable explanation of the drag of the traveller is to be found in the resistance set up by its weight rather than by its frictional contact with the ring. This appears to be the principle upon which travellers are made, as their weight is carefully graded in order to suit various counts of yarn and velocities of spindles. There is another feature in which the weight of the traveller is evidently of importance, and that is its relation to what is known as ballooning.

A glance at Fig. 4 will show that between the ring rail and the nip of the front rollers there is about ten inches of yarn, which when it is being twisted is held by the traveller and the rollers, and tends to fly outwards and assume a curved course, which from its shape is called a "balloon." Now as the distance

between the centres of the spindles is only 2 or 3 inches ordinarily, it is obvious that if this tendency is unchecked contiguous ends will come into contact and frequent breakages occur. The author is informed by Mr. Bernhardt that a careful trial made by him establishes the fact that, where the balloon is unchecked and allowed to attain its greatest size, the breakages are six and a half times as numerous as when its size is in some way limited. There are two methods of doing this, one by surrounding the spindle with a guard which prevents the balloon attaining more than a certain fixed maximum diameter, and the other by so adjusting the position of the thread board that the distance between the wire eye and the traveller is such that not more than a certain sized balloon can be formed. It is a well known fact that a balloon is absolutely essential to good spinning, as its centrifugal action enables a lighter traveller to be used, and the drag upon the yarn is thus reduced to a minimum. The use of a heavy traveller undoubtedly will check ballooning but the yarn will suffer, and therefore a well formed but not excessive balloon is of advantage. Mr. Brooks employs a plate pierced with a number of holes and mounted on pokers, which gradually rise higher as the bobbin fills, so that the balloon is checked by the hole in the plate. Other makers such as Messrs. Platt Bros. & Co., Howard & Bullough, and Dobson & Barlow, employ forked wire guards which serve the same purpose as the plates referred to. Fig. 18 represents the appliance used by Mr. Bernhardt, which is very effective and is worth attention. Instead of depending upon a guard of the character referred to, the ballooning is checked by maintaining a defined distance between the guide eyes A and the ring rail. It is clear that as the latter rises, if the guides A are stationary, there will be a greater tendency to balloon when the rail is at its lowest position than when at its highest. More than that, the attainment of the full diameter of the cop is followed by more ballooning than when the building is just beginning, and it is therefore advisable to slightly shorten the distance between the guide and the point of the spindle. The guides A are in this case mounted on a rod borne by and attached to vertical pokers B. The position of B is determined by the cam D which is slowly rotated as building proceeds. The shape of D is such

that when spinning begins, A is about an inch above the nose of the bobbin, but gradually falls until within $\frac{3}{8}$ inch of the same point, after which it slowly rises until the relative positions at the commencement and finish are as indicated by the dotted and full lines. The rise begins as soon as the cop is formed of full diameter, and one important feature in this invention is that the vertical reciprocations of the guide eyes A are independent of, less than, although simultaneous with those of the ring rail. It is certainly remarkable how effective this contrivance is in checking ballooning, and this without submitting the yarn to any injurious rubbing action. The size of the balloon is accurately checked while at the same time it is as large as can be permitted under the existing conditions. The inventor states that the effect of this arrangement is that a bobbin of 6 inch lift can be employed, where in other cases not more than a 5 inch bobbin could be used. The extra length of yarn so wound on is of great advantage and gives rise to other advantages which are well known.

So far the mechanism employed has been designed to spin on bobbins placed on the spindles, but there is another branch of the subject to which reference must be made. It will be recollected that a spindle was illustrated in Fig. 11 in which an ordinary type of mule spindle was used. Although the attempt was made so far back as 1847 this special method of spinning is not even yet completely successful, though it is quite true that many efforts have been made which have attained partial success. It may perhaps help to the understanding of the difficulties of the case to remember that weft yarn is most urgently needed in the form of cops. Now yarn which is used for weft has many less twists per inch put into it than warp yarn, and is in consequence much softer and more tender than the latter, breaking with less strain and being altogether more difficult to spin. It is therefore, under conditions which are the most unfavourable possible that the attempt to spin on the bare spindle in ring frames has to be made. In forming a cop the diameter on which the yarn is wound is constantly changing, and the largest diameter is only a little smaller than the internal diameter of the ring, while the smallest will be about $\frac{3}{16}$ of an inch. Now it will be easily understood that the drag exercised by

the yarn on the traveller will be greater when it is being wound on the larger diameter than when on the smaller, it being remembered that the spindle is always revolving at a regular rate and consequently taking up more yarn per revolution on the body of the cop than on the spindle. Thus if a regular rate of traverse of the ring rail was adopted it is clear that at one point the yarn would be taken up too rapidly or too slowly at another. In the mule this difficulty is overcome by increasing the speed of the spindles when the yarn is being wound on the nose. It is not possible to adopt any such method in the case of ring spinning, and the solution has been attempted by the adoption of a mode of giving a very quick traverse at the beginning of its downward stroke to the ring rail, so that less yarn is wound on at that point. Of course this difficulty more or less exists even where spools or bobbins are used, but it is not so acute as when only the spindle is employed. The speed of the traveller varies continually, being greater when the yarn is being wound on the larger diameter and less when on the smaller. There is thus a greater resistance when winding is going on at the nose, and breakages occur more frequently at that point. In addition to this there is the difference existing in the way the pull is exerted on the traveller at both points, which will be readily understood by a reference to Fig. 19. It will be seen that the direction of the draught of the yarn is in the first case from A to B and is an angular or circumferential one, whereas in the second case the pull is almost radial. As the yarn in proceeding from the rollers to the bobbin is passed through the traveller, it will be clear that while the revolution of the spindle will in the first case draw the traveller round the ring in the direction of the arrow, in the second case it will exercise no tractive power, or at any rate very little, on the traveller, tending rather to pull it against the ring. As the point C is, however, constantly changing its position, a certain drag is given to the traveller, but it is a periodical one, for as soon as its position is altered the old conditions are again established. In this way the yarn is in a sense twitched or wrenched, and breakages occur in consequence. As has been noted, one method adopted is to take the yarn away from the nose of the cop as quickly as possible, but it has only been partially successful, although

the maker of a machine on this principle, Mr. John Tatham, reports that it is giving good results. In Figs. 20 and 21 a special ring and traveller applied to a bare spindle are illustrated, this being made by Messrs. Platt, Bros., and Co. Limited. The ring A has a groove B formed in it in which a traveller C, made of the shape shown, is placed. The traveller has a loop or hook D near one extremity, and a second loop E nearer the centre. The yarn is first passed under the loop D and thence through E, thus giving a drag to the traveller at the point D, and causing it to travel round the groove. The loop E lies close up to the spindle when the ring is at the nose of the cop, so that the yarn passes at once on to the former. As far as could be observed by an inspection of the machine on this plan, shown at the late Exhibition, the method appeared to be likely to succeed, but it is, perhaps, premature to say much about its working. One advantage was apparent, and this was that, if the ring rail happened to be stopped with the traveller opposite the extreme point of the cop, the machine could be started without any breakage of ends, a thing which had not hitherto been attained. In considering the subject all round, past experience may be used as a guide in determining the direction in which future efforts should be made. A combination of a rapid traverse of the ring rail, with some means of avoiding the direct pull of the yarn, shown in Fig. 20 would probably also be effective, but the subject is to a great extent one for experiment, and theorizing on it may retard rather than aid its successful accomplishment. The whole question is environed with difficulty, and requires constant attention to a number of little points, but the advance during the past few years is so remarkable that a good deal of hope can safely be felt with regard to the future.

With reference to the details of the machine it is only now necessary to say further that latterly the method of driving the tin drums from which the spindles are driven has been altered, both drums being now positively driven, so that there is no variation in twist between the yarn produced on one side of the frame and that on the other. It is not too much to say that the production of ring frames would be impossible, but for the greater use which is now made of machines of precision. Take,

for instance, one of the spindles shown, and trace its construction, and it will be seen at once how carefully the various parts have to be treated and how extremely accurate is the work done. In the case of a spindle with an inner tube, the latter has to be bored its entire length or possibly only partially so, then it requires to be turned perfectly true with the bore, only by this manipulation being produced sufficiently accurate for use. The bolster case has to be bored, and turned all over, the underside of the collar made perfectly square with the bore, and the shank requires screwing and fitting with a nut. The spindle must be forged and ground so as to be quite true, and has to be fitted with the sleeve. The latter is also bored, turned, and is pressed on the spindle, along with which it must revolve with perfect steadiness. The above are a sufficient catalogue of operations to be performed, especially when it is stated that the cost of such a spindle complete does not exceed two shillings. It is, however, not only the spindles which are accurately constructed, but in addition the whole of the machine is now made by means of an elaborate series of special tools, which ensure alike the absolute accuracy and cheap cost of the machine. This feature is one of the most marked in the construction of all classes of textile machinery, and tends to emphasise the great change in the methods pursued now and only a short time since. It is not too much to say that without the adoption of templates and accurate machine work, most textile machines would be greatly enhanced in cost, and could not even under these conditions be as satisfactory as they are to-day. It is a gratifying testimony to the inventive mechanical and commercial skill of our machinists that to-day textile machines are produced in this country which are far superior in their general results to any produced in other countries. The stress of competition has led to an improvement of the methods of manufacture, which have been so strikingly successful as to place the position of machine makers almost out of the reach of assault from without.

This is by the way however, and as this paper has already been too long, it must be drawn to a conclusion. Nothing has been said with respect to doubling, or as they are better called, twisting frames. In their general details they resemble ring spinning machines, but are, of course, heavier in construction

and have a special arrangement of rollers. The rollers are not intended as in the spinning frame to attenuate the yarn, but simply to feed it, and for this reason there is but one line. The top rollers are heavy enough to give the requisite nip, and the ends of yarn to be twisted may be passed through water or not as desired. If they are so treated the bottom rollers revolve in a water trough, being lowered into position, or raised out of it by means of a worm and worm wheel at the end of the frame. A long description of this machine is not necessary, and it suffices to note that the experiments with ring frames were first made in this country with twisting, and not spinning machines. It was in this branch of the business that Mr. Brooks first made his success, and not until the Rabbeth spindle was introduced by Messrs. Howard and Bullough did ring spinning begin to be largely practiced. To-day it appears likely that the elastic or top spindle is going to take the place of all other forms, but there can be no doubt that the adoption of the self contained spindle established this system of spinning on a firm basis.

The consideration hitherto given to the subject in this paper has been devoted to the machinery employed, and to this object it will be well to adhere. The *minutiæ* of spinning are hardly likely to interest the members of this Association, and for the same reason any comparison between the ring frame and the mule may be omitted. It would be impossible to make such a comparison without entering into a number of controversial points as to the relative excellence of the yarn produced on each machine. As the question has become better formulated it is now pretty generally admitted that both machines can be advantageously used under given conditions, and with that expression of opinion, this subject may be dropped. One important feature is the power required for driving ring spindles, and on this point there are abundant evidences that the horse power required is singularly little when considered in conjunction with the rate of speed obtained, but is somewhat greater than that absorbed in driving mule spindles. It is not necessary at present to give any detailed figures relating to this point as, if desired, they can be appended in the reprint of the paper.

In concluding the author wishes to express his thanks to many gentlemen who have furnished him with information; to the

Editor of "Industries" for the use of several blocks, and t various firms who have been good enough to lend sa spindles, rings, and travellers. It has been his desire to g plain unvarnished account of these machines in the past a the present day, and to present to the members an acc record of the various mechanical contrivances at present us this connection.

Power Tests of Ring Spinning Machines made at the Dwight Manufacturing Co., Chicopee, U.S.A., April, 1885, by Mr. H. S. Chase.

Date.	Time.	Make of Frame.	Spindle.	No. of Spindles.	Counts.	Condition.	Spindle Speeds.	H.P. required for Frame.	No. of Spindles per H.P.
April 9th	2-0 to 5-30 (3 tests)	Lowell Spinning	Rabbeth	192	28's	Bobbins from ¼ full doffed to ½ full again	7439	1·5915	120·7
,, 10th	10-30 to 11-30	Do.	Do.	192	28's	Bobbins ¼ full till full	7324	1·5094	127·2
,, 11th	8-15 to 11-30	Do.	Common 11 oz.	208	21's	Mean of 11 tests, Bobbins empty, running an hour	6409·5	2·493	83·4
,, 13th	9-0 to 2-30	Biddeford Spinning	Sawyer	144	21's	Bobbins ⅜ full till doffed and filling again	7184·5	1·2565	114·9

Tests of Frames at the Mill of the Lawrence Manufacturing Co., U.S.A., carried out by Mr. Channing Whittaker, C.E., April 15th, 16th and 17th, 1885.

Revolutions per minute of Spindles.	Spindles per H.P.	Relative Humidity.	Average Numbers.	Breaking Strength in Pounds.	Average Temperature in the room F.
6,609	132·1	28	19·31	84·42	77·2
7,039	110·9	32	19·52	84·00	77·5
7,976	99·4	29	19·81	79·28	76·3
9,081	66·2	33	19·80	81·14	75·9
9,947	62·6	31	19·12	86·00	78·3

Tests made at Lonsdale, Rhode Island, U.S.A., by Mr. W. S. Southworth, now Superintendent of the Massachusetts Cotton Mills. Sawyer Spindles.

REVOLUTIONS PER MINUTE.		POWER FOOT POUNDS PER SECOND PER SPINDLE.			Number of Spindles to One Horse-power.
Front Rollers.	Spindles.	Empty Bobbins.	Full Bobbins.	Mean.	
59·2	5,408	3·140	3·675	3·407	161·4
63·95	5,842	3·536	4·139	3·837	143·3
69·9	6,386	4·025	4·933	4·479	122·8
75·85	6,929	4·659	5·655	5·157	106·7
82·5	7,539	5·338	6·537	5·937	92·6
88·9	8,124	6·034	7·331	6·682	82·3
97.95	8,948	7·009	8·419	7·714	71·3

The weight of the Spindle was 3·98 ozs., of the Full Bobbin 2·23 ozs., and of the Empty Bobbin 71 ozs.

DISCUSSION.

Mr. Geo. Bernhardt (who was prevented by indisposition from being present) wrote as follows: I have just run over your copy for which I thank you. Of course it will be criticised, that will show its value, and I myself could have altered or added a few things had time permitted.

1st. Where you speak of the accuracy of the tools required to make the several parts of the spindle correctly, you might have mentioned that the cast-iron used for the bolsters is of special selection and annealed carefully to allow the fine proportions being carried out. But this very fact softens it and opens the pores of the metal, destroying the lasting properties of the wearing surface. Nickle or bronze, which is a denser metal with its pores closed by rolling pressure, possesses greater resisting power. I found this during some experiments running spindles at 18 to 25 thousand revolutions. For example, the Whitin spindle runs well at 10,000, all oiled and loaded with full bobbin, but if the speed was put up to 18,000 I found the soft cast-iron bush to grind away fast in spite of all lubrication, whereas with nickle bolsters they remained clean and without abrasion.

2nd. The lubricant also forms an important item, and my opinion is that if mineral oils had not been in existence at the time these self-contained spindles began to be used, they could not have survived, because animal or vegetable oils are quite unsuitable, clogging the bearings, corroding the metal, absorbing great power, and are expensive.

3rd. Doubled flanged or reversible rings have been in use in the United States long before introduced here by Coulthard, but they were differently constructed and had no loose plate.

4th. The thread guide traverse adopted by me is used for 5in. lift when any counts above 32's are being spun.

Mr. W. H. Beastow, after complimenting Mr. Nasmith very highly on the excellency of his paper, said there was still a later spindle which had not been referred to, namely the Union,

which was being used very extensively indeed. In form it was similar to the one described by the lecturer, but the circular or barrel spring was dispensed with. He would not then proceed to describe the spindle, since he was of opinion that a whole evening might well be devoted to the consideration of the various spindles, and if the opportunity were afforded him he should be glad at some future meeting to read a paper on that subject before the Association, when the members would have an opportunity of analysing the different constructions of their powers of running. He might say that at the works with which he was connected they were in a position to turn out three millions of travellers per week.

Mr. Macgregor said the progress of the ring frame had got to such a state of advancement that it was only a question of a spindle between one machine maker and another. The principal of the machine was secured and it would continue to progress, and it was due entirely, in his opinion, to the introduction of the self sustaining spindle whereby it could be easily adjusted to the ring and made perfectly perpendicular and further improved tools whereby they could be made cheap. One great drawback to its original progress was the increased cost of the spindle and ring, and his first experience was that two or three shillings used to be the difference between a common throstle spindle and a ring one, and now there was no difference, this arising from the lessened cost of the ring. The question was now whether ring spinning could be applied to spinning weft succesfully. The tendency of the present day was to use better cotton in the yarn than what used to be the case, and in that case they might spin on certain classes of weft with success, but they would need to use a good thread. In spinning on the bare spindle, however, he thought there would be great difficulty on account of the great difference between the drag on the bare spindle and on the full cop, and it was that sudden variation in making a cop between the great drag on the bare spindle and the decreased drag which caused ballooning. With reference to the remarks about Platt's traveller, that he might say was the only way to wind on without breaking on the bare spindle, the credit of which he was of opinion was due to Mr. Lancaster. There was

no difficulty in spinning ordinary weft on the spool such as the one before them, but he certainly thought there would be difficulty in spinning soft weft on the bare spindle.

Mr. S. Ecroyd said the paper practically admitted of little discussion, but it would be of some advantage if they had opinion expressed on the question of spinning weft on the bare spindle.

Mr. J. M. Leigh said he had great pleasure in corroborating the remarks of Mr. Macgregor in regard to spinning weft on the bare spindle, and has had been remarked the difference in the diameter of the spindles and the bobbins was very great, and it made a difference of about a turn and a half or two turns per inch between the small diameter of the spindle and the full diameter of the cop.

Mr. J. Hartley asked if Mr. Nasmith could give him any idea of the number of spindles reckoned per horse power.

Mr. Thomas Ashbury said Mr. Nasmith had contributed a very interesting paper. They happened to be in a district where spinning was the leading industry, and he thought they had amply proved that they could do that work as well or better than any other part of the world. He had great pleasure in moving that the best thanks be given to Mr. Nasmith for his very able and instructive paper.

Mr. W. R. Goulty seconded the motion, and at the same time complimented the lecturer on the literary excellence of his paper apart from its otherwise intrinsic merit.

The Resolution was passed with acclamation.

Mr. Joseph Nasmith in reply admitted that he had expended a great deal of time and trouble and experienced a certain amount of difficulty in order to make the subject which he had selected for his paper as complete as possible. Proceeding, he said one difficulty was found in the jealousies of machinists, who were

much afraid of their competitors getting information. Certainly it did seem to him, in the face of the severe competition which we were going to suffer from abroad and of the fact of the very many clever mechanics who were springing up on the Continent and America, that unless there was a spirit of cordial unison and a harmonious working together, it augured ill for the future of our trade. He, himself, was fortunately or unfortunately, in a position of absolute neutrality, having no bias towards any particular machinist, his only desire having been to lay before them an accurate description of each machine. Not being connected with any particular firm he was in a better position to lay the fact before them, since when there was such a connection there was generally an impression that the author of a paper was "running" his own machines. He might add that if these papers were acceptable he should be glad at some future time to add another to his series of papers, on cotton machines that are used in the district.

With reference to the various statements in his paper, he might say that he did not think they were as free from question as various speakers seemed to think. He was doubtful of some of them himself and thought that they might be cleared up in the discussion, but his anticipations had not been realized. The remarks communicated by Messrs. Macgregor and Bernhardt were very valuable and were worth attention. Replying to Mr. Hartley he said that 65 ring spindles, with preparation, per H.P., were as many as could be safely reckoned in calculating the power. He had to thank Messrs. Macgregor, Bernhardt, and Blakey for aid in the way of information, and Messrs. Brooks, Coulthard, Ryder, and Eadie for the loan of the various models shown.

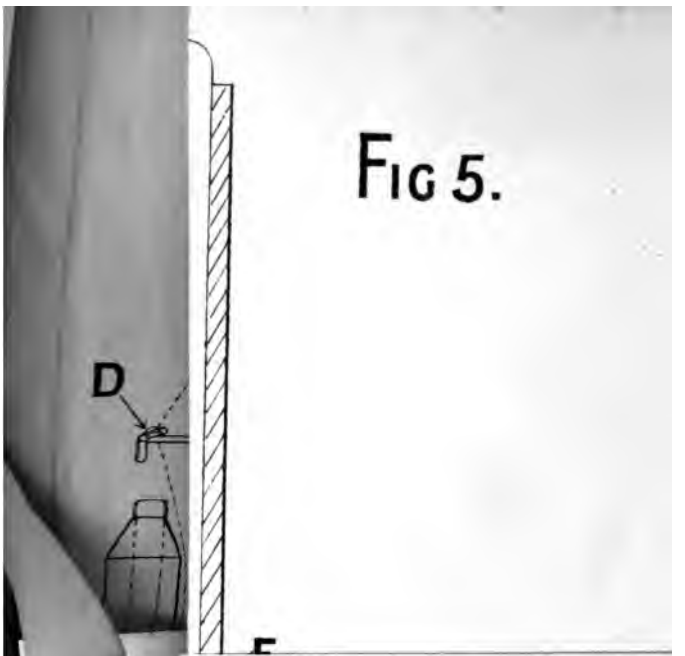

FIG 5.

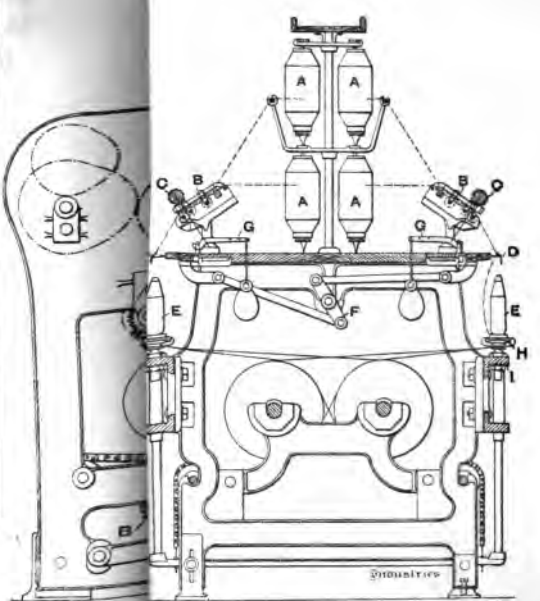

FIG. 3.

LIBRARY

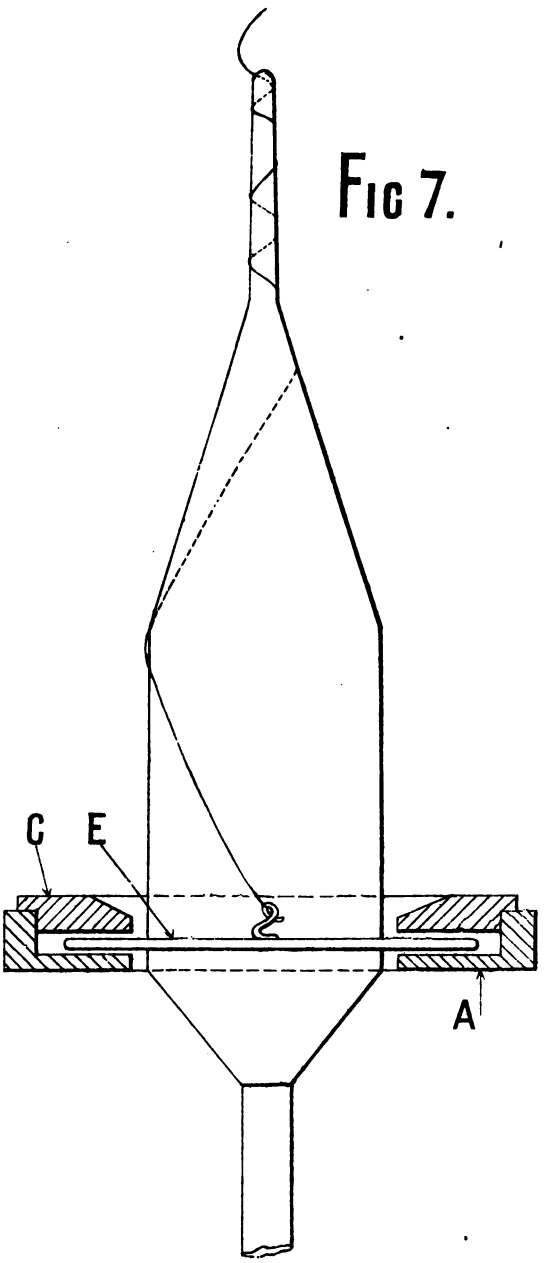

FIG 7.

THE NEW YORK
PUBLIC LIBRARY

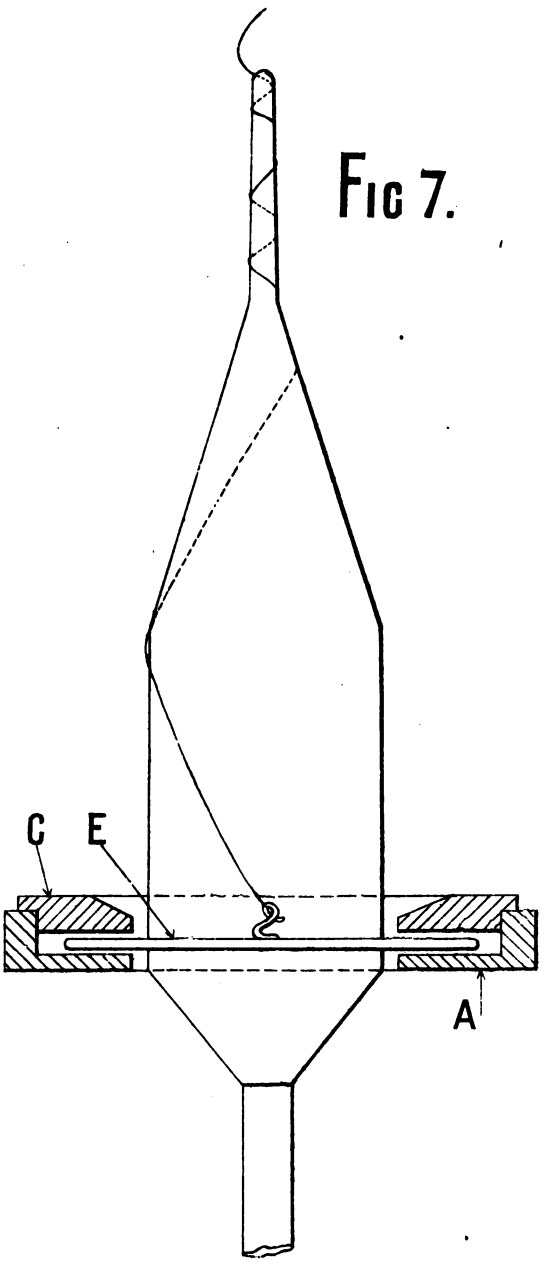

FIG 7.

THE NEW YORK
PUBLIC LIBRARY
ASTOR, LENOX AND
TILDEN FOUNDATIONS

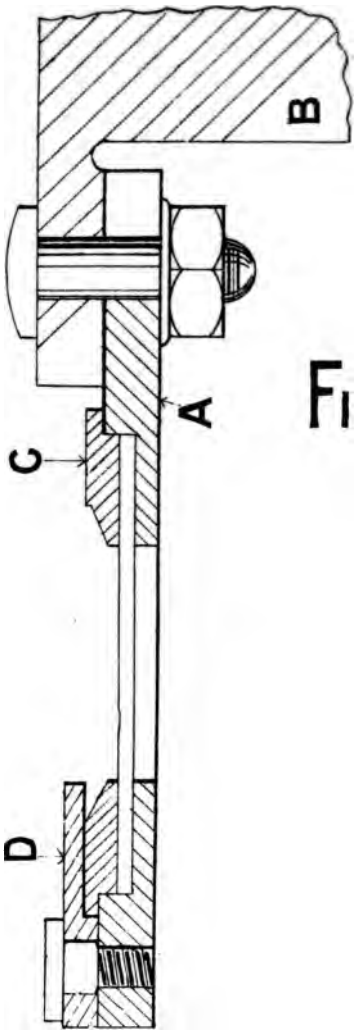

Fig 8.

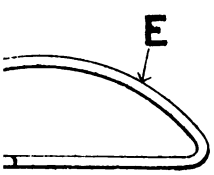

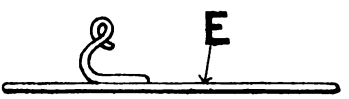

Figs 9 & 10.

PT.

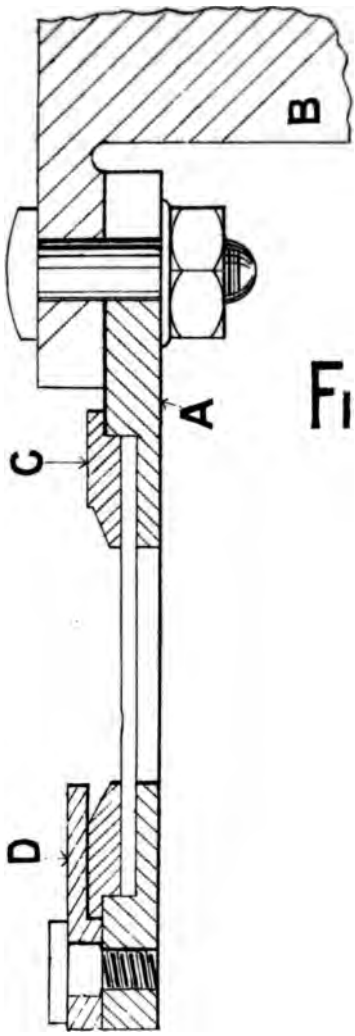

FIG 8.

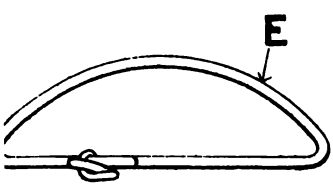

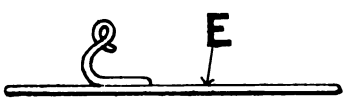

FIGS 9&10.

FOUNDATIONS

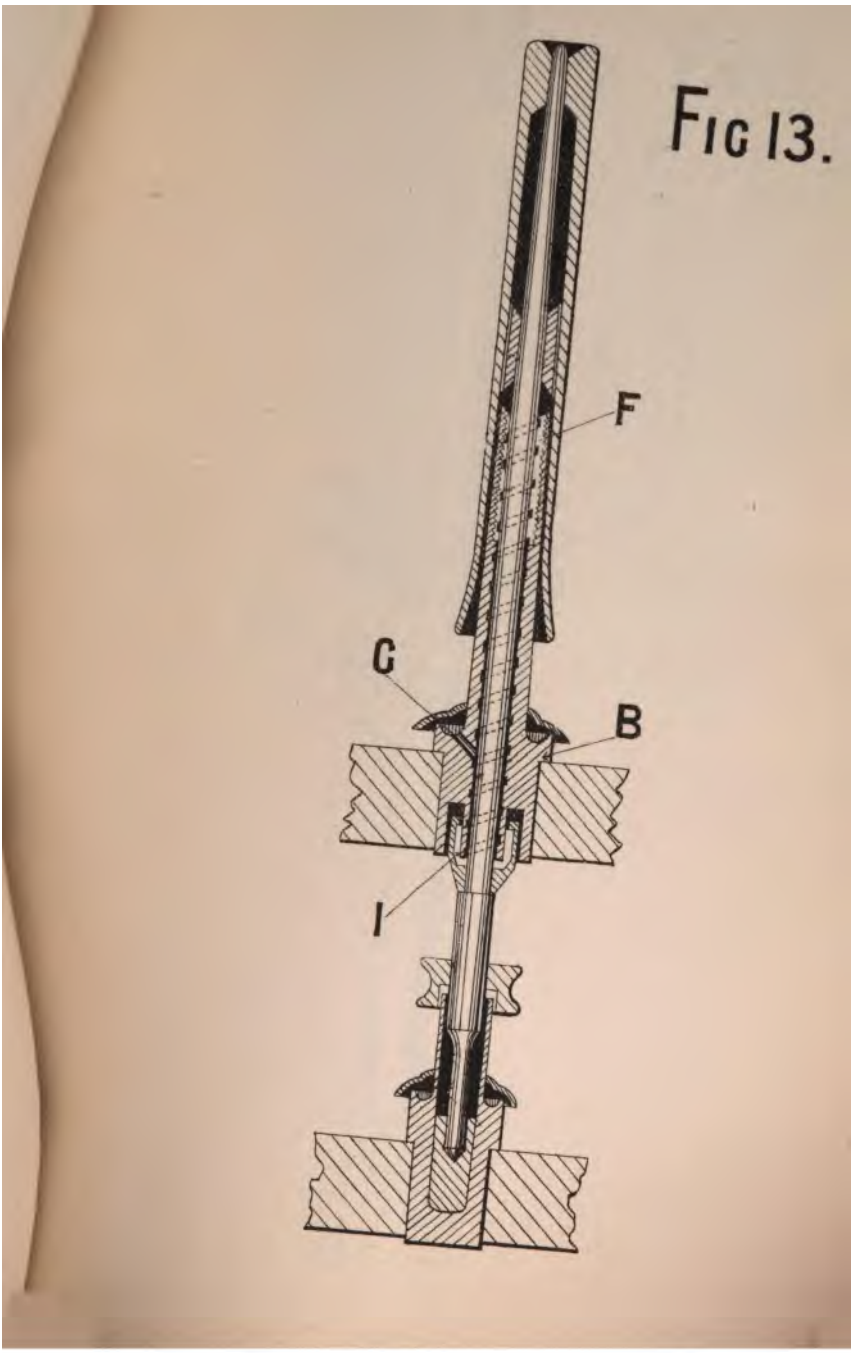

FIG 13.

THE NEW YORK
PUBLIC LIBRARY
ASTOR, LENOX AND
TILDEN FOUNDATIONS

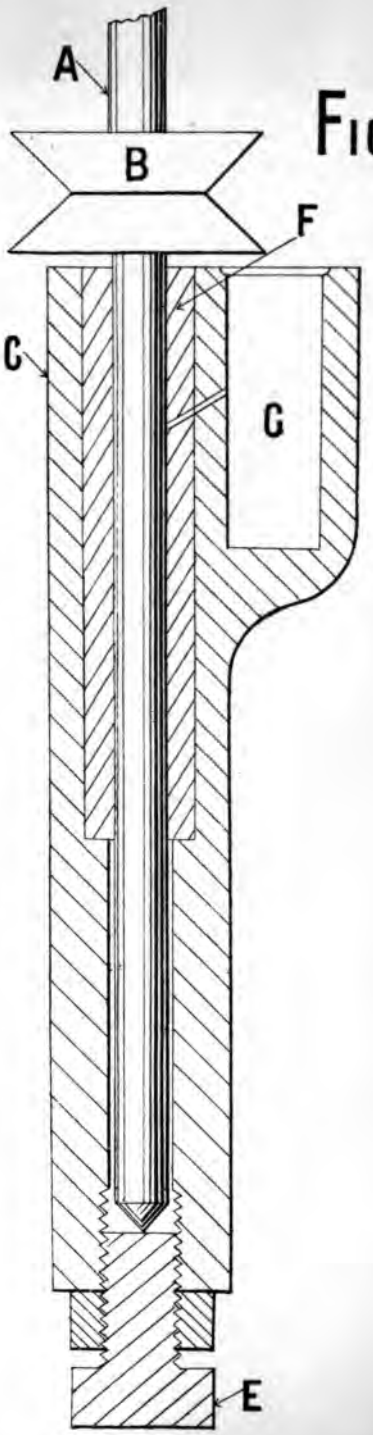

FIG 14.

AND
LATIONS

FIG. 15.

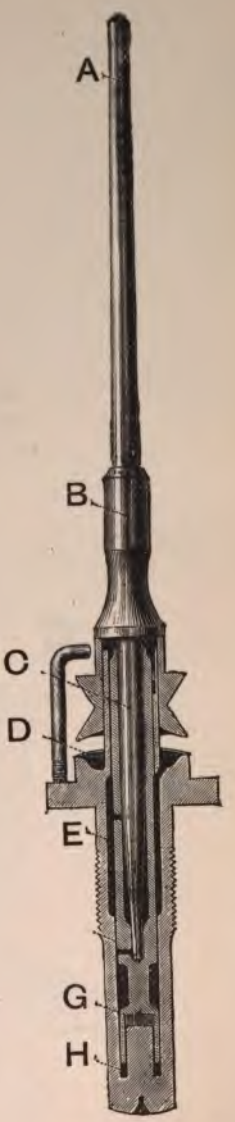

FIG. 16.

I shall not attempt to draw fine lines of distinction, for I do not know that such could be done, even between our old friend the Steam engine and the Gas Engine of a few years ago; but excluding the Steam Engine pure and simple, we may broadly divide our present subject into two distinct classes, namely:—those engines using water as against those using no water at all.

These two classes we may severally divide into Internal and External Combustion Engines, and again into regenerative and non-regenerative. And yet again into the three types referred to in Dugald Clerk's paper,* illustrated by the small diagrams and marked types 1, 2 and 3 (see plate 2).

Beyond perhaps a passing remark as we go along, I purpose leaving further details of classification, except the types indicated by the small diagrams referred to. Clerk thus describes the three types:—

(1.) "An engine drawing into its cylinder gas and air at atmospheric pressure for a portion of its stroke, cutting off communication with the outer atmosphere, and immediately igniting the mixture, the piston being pushed forward by the pressure of the ignited gases during the remainder of its stroke. The in-stroke then discharges the products of combustion."

(2.) "An engine in which a mixture of gas and air is drawn into a pump, and is discharged by the return stroke into a reservoir in a state of compression. From the reservoir the mixture enters into a cylinder, being ignited as it enters, without rise in pressure, but simply increased in volume and following the piston as it moves forward, the return stroke discharges the products of combustion."

(3.) "An engine in which a mixture of gas and air is compressed or introduced under compression into a cylinder, and then ignited while the volume remains constant and the pressure rises. Under this pressure the piston moves forward, and the return stroke discharges the exhaust."

Clerk then goes on to show the relative dynamic values of these three types as 21, 36 and 45 respectively, and these figures I certainly will not dispute as far as they go. But these figures

* Proceedings of Institute of Civil Engineers, 4th April, 1882.

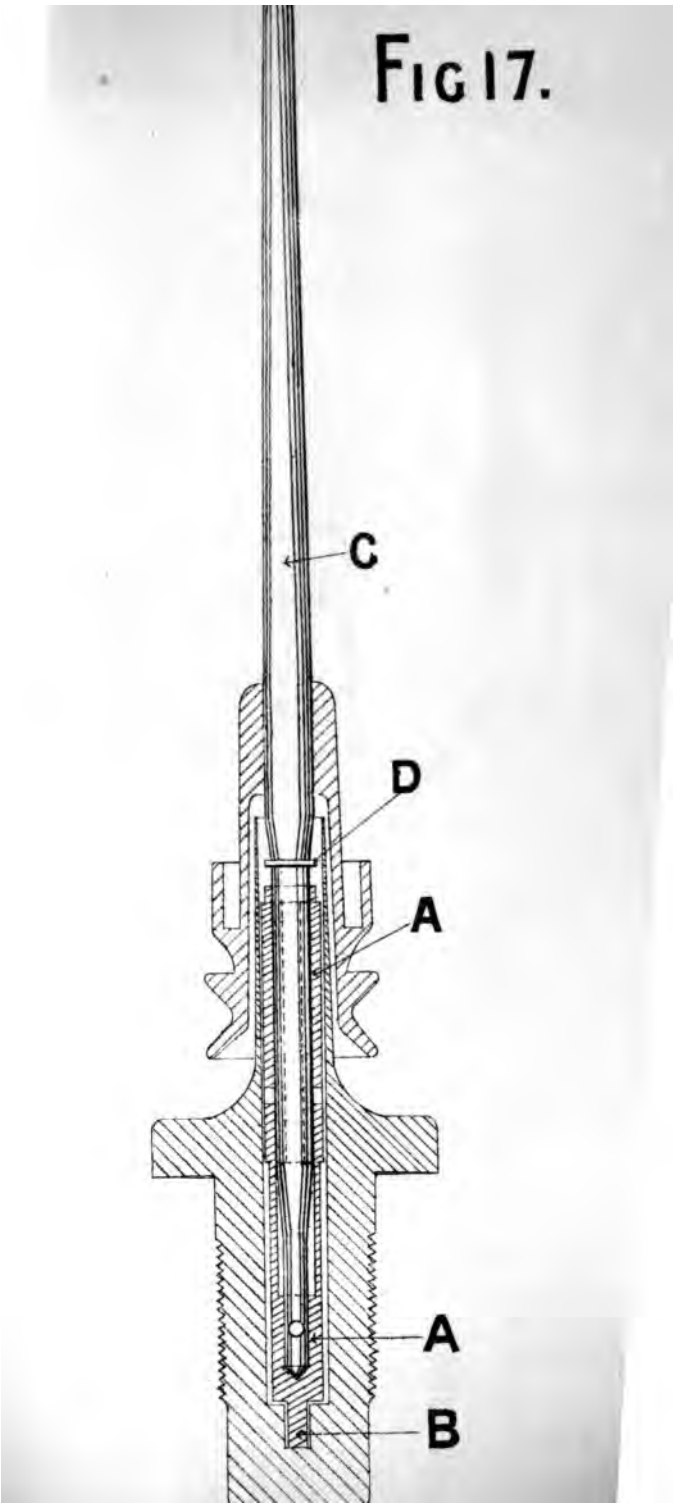

FIG 17.

THE NEW YORK
PUBLIC LIBRARY

ASTOR, LENOX AND
TILDEN FOUNDATIONS
R L

But there is another form of the application of water to the Gas Engine which is such an important factor in the success of the Gas Engine as we are most familiar with it at the present day, which we cannot so easily dispose of though an acknowledged great evil. I need hardly say I refer to water jacketing, and here it will be interesting to refer to Clerk's admirable little work on the "Gas Engine," page 176, where a dynamic analysis is given of an Otto Engine.

Work indicated in cylinder.....	17·0
Heat lost to cylinder walls.....	52·0
Heat carried away by exhaust gases.....	15·5
Heat lost from engine by conduction and radiation...	15·5
* See plate 1.	*100·0

Clerk here improves upon his original paper read before the Institute of Civil Engineers, 4th April, 1882, where he put the latter two items into one, but he is still one item short, namely, the amount lost by incomplete combustion, an item of no mean importance. The difficulty of getting at accurate figures from practice is exceedingly great and, I am afraid, experimenters have been too apt to presume that after getting at certain items which they have been able to ascertain pretty closely and with a fair degree of certainty, that what remains unaccounted for must be the item they cannot measure. And this brings us to that much vexed question of, dissociation. Of all the experiments that have been made on this subject I do not think there is one reliable, or even near enough to mention an approximate figure with any degree of certainty. The very nature of the experiment, as we have been accustomed to see it carried out, puts it beyond the possibility of correct investigation. I do not think we can ever get at the point of dissociation by experimenting in closed vessels, for the simple reason that I am convinced it is entirely regulated by pressure, and on a diagram would form a curve of inverse ratios somewhat similar to the adiabatic, but far above it. It is a matter of great surprise to me that the influence of pressure upon the point of dissociation has not been more fully recognised.

THE NEW YORK
PUBLIC LIBRARY

ASTOR LENOX AND
TILDEN FOUNDATIONS

experience, are inclined to think that both with regard to guncotton and gunpowder, the effects of dissociation, if they exist at all, are practically inappreciable. At all events, the actual pressures as measured, both in case of guncotton and gunpowder, are certainly not below those required by theory." I may mention here that the pressures realised in the experiments Capt. Noble referred to, reach as much as 70 tons to the □ inch for guncotton, and 43 tons to the □ inch for gunpowder. Leaving these enormous pressures and coming down to the ordinary atmospheric pressure, let us first take a glance at the steel melting furnace. We know that some steel does not melt much under 2,600 deg. Fahrenheit, and we know that steel melting would be carried on at a very slow pace if the temperature of the furnace is not several hundred degrees higher, such a furnace then must be from 2,800 deg. to 3,000 deg. Fahrenheit, and there seems to be no approach to dissociation in these furnaces. If, then, there is no dissociation at 2,800 deg. Fahrenheit and 15 lbs. pressure, how much less should we expect to find dissociation at 220 lbs.? *It seems to me beyond all possibility for dissociation to come within any temperatures and pressures ever likely to be used in a gas engine, and I am very much inclined to put the theme entirely to one side as unworthy of further argument, and account for checked inflammation in another way.

In a paper read by Clerk before the Society of Chemical Industry, January 29th, 1886, he gave the results of some experiments which I will reproduce. I am sorry he is not here to give us the benefit of a personal explanation. It is evident he has given up the dissociation theory as affecting the Gas Engine. What then is the cause of this slow combustion? Can we set up any theory that will account for it? Let us try by making one or two diagrams of the different stages in the progress of combustion. This I have attempted to do by diagram on plate 3.

We know the composition of air is four volumes of nitrogen and one of oxygen, this may fairly be represented by the first term of the diagram. Common coal gas in round figures is

* Clerk gives 1,537 deg. centigrade as the maximum temperature in his engine = 2,809 deg. Fahrenheit.

THE NEW YORK
PUBLIC LIBRARY

ASTOR, LENOX AND
TILDEN FOUNDATIONS

of production, and should there be anything in this dissociation theory, compression is the antidote.

(2nd.) *Sustained Pressure*, as in a Steam Engine, is a feature absolutely essential for many purposes. A feature we do not get in the Gas Engine of the day.

(3rd.) *Commotion* is another very important feature, and this again we do not get in the engine of the day, at any rate not in that degree necessary for rapid combustion.

(4th.) Hot Cylinders and no Water Jacket is about the greatest necessity of all, and seems to be the only hope of materially augmenting the efficiency of the present engine; for by cold cylinders, it is admitted on all hands, that fully 50 per cent of the developed energy is now lost.

How then are these very desirable features to be obtained? I will give you my own notions in answer to this question, and it will be for you to challenge any you may not think correct or feasible. I will take the 4th item first, because it is the most important one of all, and the one which really drew me thoroughly into the Gas Engine question. It is embodied in a patent I took out a year or two ago, but which for several reasons I did not think it prudent to attempt to develop immediately. It is illustrated by the model before you and the diagrams, figs. 1 and 2, plate 4. The chief feature of which is that of bringing in cool air from the opposite end of the cylinder to that which, so far, has been universally the practice. You will notice in figure 1 showing the position of the piston at half stroke, that the cold air portway is placed as near the packing rings of the piston as it is possible to do. At this point then, a stream of comparatively cool air is admitted by means of an annular cavity and narrow annular portway, so that the whole of the circumference of piston plunger and cylinder is flooded with cool air. And as the piston moves out leaving a narrow annular cavity between the plunger and the working surface of the cylinder, the whole of that narrow annular space is filled with this cool air, effectually excluding dust as well as heat, so that the working surface of the cylinder will be as clean and cool as any steam engine, and this with very little loss of heat, for as the old adage says, "prevention is better than

OFFICERS.

1888.

President:

MR. SAMUEL DIXON, M. INST. M.E.

Past-President:

MR. ALDERMAN W. H. BAILEY, J.P.

Treasurer:

MR. HENRY MAINWARING.

Trustees:

MR. E. ASQUITH, MR. G. CARTER, MR. R. RAWLINSON
MR. JAS. WALTHEW, AND MR. T. ASHBURY.

Council:

MR. C. FARMER,	MR. J. HARTLEY,
,, S. BOSWELL.	,, J. HORSLEY,
,, W. TAYLOR,	,, W. LAWSON.

Secretary:

FRED. WALTHEW,
31, Shrewsbury Street, Old Trafford, Manchester.

Assistant Secretary and Librarian:

FRANK HAZELTON,
15, Raglan Street, Hulme.

and then ignition, a hot cylinder is out of the question, on account of the premature ignition it would cause. The process of admission as I would propose it is as will be seen by referring to figure 1, plate 4, which shows an arrangement having separate gas and air valves of the simple slide-valve type with one portway only to each. The valve near the piston proper is the air valve, and supplies the cooling injection before described; but the air just after passing through this valve, is divided into two streams, part for the primary purpose just mentioned, and part taken along a small passage or portway to the hot end of the cylinder to mix with the gas and promote combustion. The valve near the hot end of the cylinder is the gas valve, the portway leading direct to the cylinder in such a way as to cause the jet of compressed gas to impinge upon the jet of cool air last mentioned. The process of one revolution would be this:—The piston being right home, and with no more clearance than that of an ordinary Steam Engine, both valves would open, perhaps just a slight lead being given to the air valve, so as to fill the cylinder clearance with the initial pressure before actual combustion commences. Then the instant the piston begins to move, gas and air will enter together and burn as they enter without explosion. The combustion thus carried on will merely expand the air and gas without any increase of pressure, for the instant that expansion takes place the inflow of fresh gas and air is checked, and only as the pressure tends to lower will fresh supplies flow in, burn, and keep up the pressure, so that the action is automatic. The ignition, of course, is spontaneous. The lining of the cylinder being hot, thus no igniting slide is necessary. It is true some igniting apparatus will be required for starting purposes until the cylinder becomes hot enough from working; but such an apparatus with such an engine as I am describing need be but of the simplest form. It is only necessary to form two very small bore holes leading into the ignition portway, the one to be supplied with gas and the other with air, under pressure, direct from the valve chests. Another small opening near these must also be provided through which the gas and air may be lighted, and once lit up will remain alight until turned off. One small double-way cock, or two small single-way cocks then is all the

D
ONS

would only put into the atmosphere one-quarter of the noxious vapours now sent from the present Steam Tram Engines. I might add that by the features I have just indicated I hope to save half the present loss caused by water-jacketing; that is to say, increase the efficiency of the present Gas Engine 50 per cent. and, besides this, to get out of one cylinder of a given size just about three times the power of the Otto type Engine. This, however, would not mean one-third the cost, because we have the pump in addition, but it does mean half the cost per H-P., together with all the additional advantages of the wider field of usefulness as already stated. With these assertions, gentlemen, I await your criticism, which I hope will be vigorous and numerous.

DISCUSSION.

The President referring to the temperatures between which the gases were worked, said that theoretically there was in the Gas Engine an available efficiency of 83 per cent., but practically there was only about 29 per cent. brought out. He believed in one of the tests of the "Otto" Engine given by Mr. Anderson, in "Heat in its relation to Work," it was very clearly pointed out that 29 per cent. was only utilized of the energy given to the Gas Engine, and that 69 per cent. was lost with the water-jacket, and only about 2½ per cent. with direct radiation and exhaust, so that it was clearly demonstrated what a terrible loss accrued through the use of the water-jacket. It was undoubtedly a great evil, and Mr. Guthrie wished to see how it might be dispensed with.

He (the President) would like to hear the opinion of the members on the desirability of working with higher temperatures because that was the secret of working those engines. The highest absolute temperature in the Steam Engine was something like 800 deg. Fahrenheit, thus only giving a small range of temperature to work through, whereas in the Gas Engine it was about 3000 deg., so that there was a wide margin, and therefore it was evident that there was more virgin ground in the latter than there was in the former. In his opinion if

higher temperatures could be used it would undoubtedly result in an increased efficiency. At the same time it was probable a totally different material would be required for the cylinders in order to meet the increased temperature.

With reference to diagram, plate 3, he thought it was rather an ideal picture, as he fancied that the combination which would take place would be very different from what had been calculated upon by Mr. Guthrie, but he entirely agreed with Mr. Guthrie that the question of the dissociation of the gases need not be taken into account in the Gas Engine.

Mr. John Taylor said it was evident that Mr. Guthrie had already noted the loss through the water-jacket, and in attempting to solve the problem of how much heat it was possible to use in the Gas Engine he had tried to do it by an injection of cold air. He thought if Mr. Guthrie eventually succeeded in producing the results which had been stated in the paper, it would be admitted that a great advance had been made. At the same time he agreed with the chairman that so far as reaching the forces of nature, whether of steam or gas, that they were really all gases, it being only a question of the materials of which they were formed. In this country however they had such a way of sticking to what was established and generally known, and which could be reduced to practice with safety, that they had in a measure no other means of producing power. Mr. Martin in a lecture delivered before the Association some time since said that he did not think that gas would be the future agent of power, but that most likely some more powerful explosive giving off less heat would be the one generally adopted for small motive powers. Other minds had evidently been following in the direction indicated by Mr. Martin, since a Frenchman had been lately making an engine with powerful explosives, having a large radiating heat. He (Mr. Taylor) thought that engineers should not shut their eyes to developments in that direction, because he himself believed that ultimately some powerful explosive would displace steam, and if not generally, power would be provided for a many requirements in this way.

The President observed that it was evident that they must try and work with a hot cylinder, so that they could start with high temperatures and work down gradually in order to get the most out of the gases.

Mr. Gilbert Lewis said undoubtedly it was the most advantageous to work at the highest possible temperatures in order to get the full value of the gases. The Simon Engine was an attempt, not exactly of water but of steam, to produce a lubricant that would overcome the difficulty caused by the wearing away of the surfaces. Some amount of efficiency might be lost by that process, but the question was whether it might not be counterbalanced by the introduction of excessive heat.

In making some experiments with asbestos he was rather surprised to find that he could bind it firmly together, at the same time producing a good working surface, in fact making it into a permanent lubricant itself. He had never yet tried it in the cylinder, but it had occurred to him, if it were possible, to line a cylinder with asbestos, hydraulic pressed, to a certain density. Of course the question naturally followed, would it work under those hot temperatures and would its surface be affected by the wearing action. It certainly appeared to him that if such an application would retain its nature and work effectively as a lining in the cylinder, the difficulty found in the present case might be overcome.

Mr. R. Dempster asked what would be the effect if, instead of introducing air, four of nitrogen to one of oxygen, the latter gas alone could be used, supposing it could be made cheap enough for the purpose.

Mr. John Taylor asked if it were possible to find a material that would not be destroyed at the high temperatures which the President seemed to think was necessary.

Mr. James Hartley said that if the engine, as explained by the lecturer, would give anything like the results expected from it, it would indeed be an advance of what was being done at the present time. The greatest difficulty in point of economy

appeared to him to be the cooling of the cylinder, but if a hot cylinder could be used then this difficulty would be overcome. He well remembered what Mr. Adamson said with reference to the first Quadruple Engine, that at the time it was made he (Mr. Adamson) had not learned what engineers had learned at the present time, that hot steam should not be put into a cold vessel. The success attending the Triple and Quadruple Expansion Engines had been mostly due to jacketing the cylinder, and which must be adopted in all Steam Engines if any economy was to be realized, now that high steam pressures are used.

Mr. Guthrie said the valves would be worked exactly as in the Steam Engine, with an expansion valve on the back of the main slide, which was entirely different to the present Gas Engine, but as to getting a parallel gas line, why of course it was practically impossible in the present Gas Engines. If Mr. Guthrie could construct an engine that would accomplish the latter, there was no doubt it would run the Steam Engine very close indeed.

With reference to the lining of the cylinders it must be remembered that there was not the same difficulty experienced as formerly when lubrication was confined to tallow, which was unsatisfactory at high temperatures, whereas lubricating oils at the present time had attained such an efficiency that there was scarcely any limit in their application to the temperatures of the Steam Engine. In its application to the Gas Engine of course it might be somewhat different, but still with an admixture of air, as suggested by Mr. Guthrie, he had not the slightest doubt that excessive wear in the cylinders might be prevented. As far as efficiency was concerned he thought it must be admitted, if the Gas Engine and Steam Engine were compared as heat engines, the former would be found to be superior, though at the same time the Steam Engine far more utilized the heat now than it did 10 years ago; and he thought as time went on that it would utilise it still more, since there was now no difficulty in constructing boilers that would carry almost any pressure. He should certainly like to see if the engine described by Mr. Guthrie could be applied to the working of our tramways, since so far the many other schemes for that purpose had not ı an entire success.

With reference to asbestos lining, that of course was largely used in the manufacture of cocks. Now if the piston was simply like the plug of a cock revolving round without changing its position it would do very well, but considering that it was very different he did not think asbestos would do for cylinder lining. As far as he was himself concerned he believed there need be no fear about cast iron up to any limits of temperature that would be obtained in the cylinder with the now efficient means of lubrication.

As regards the future of the Gas Engine he thought if its turning could be made so regular as to be applicable to drive a cotton mill then its progress would be rapid. Concluding, Mr. Hartley said he hoped that in testing his engine Mr. Guthrie would do it by lifting water. It was all very well to apply a dynamometer to the shaft or a brake to the wheel, but it could not always be got in the same state, whereas by lifting water they had a constant dead load and consequently more reliability.

Mr. Dempster said he could not see what the object was in introducing air instead of water, as he failed to perceive the difference in cooling by one or the other.

Mr. Daniels proposed a vote of thanks to Mr. Guthrie for his interesting paper.

Mr. J. Nasmith seconded the proposition, asking at the same time if Mr. Guthrie would more fully explain the reason why he used a cold air injection instead of a water-jacket.

The resolution was passed with acclamation.

Mr. Guthrie, in acknowledging the vote of thanks and replying to the discussion, said he was exceedingly obliged for the kindly expressions. He could only say that, like Mr. Daniels, he entered upon this question from a feeling of a great want of light, and had been drawn on step by step to the conclusions he had just laid before the meeting, conclusions he was pleased to find that had stood the fire of criticism. He knew in this matter he had not followed the usual practice of spending a lot

of money first in experimenting to find out afterwards that a lot of the same ground had already been covered by others. He had taken what he thought the most prudent course, and boldly put his propositions before a few able minds, including Professors Guthrie and Jenkins, and had now brought it before their final court, that of the Manchester Association of Engineers, which he would not have troubled had he not been backed up with the good opinions of the gentlemen before referred to.

In reference to some of the questions raised he would say that the temperatures he proposed to work his new engine with would be probably a little lower than that now experienced in the water-jacketed Gas Engine, or about 2,000 deg. Fahrenheit. There was no doubt it would be more economical to work with a higher initial temperature, but at present they knew of no material that would stand it. Professor Jenkins spent much time in trying to solve this problem, and tried many kinds of clay goods; but all such material was porous, and when subjected to rapid variations of pressure the vapour impregnated or found its way, whilst under high pressure, into the interstices of the material, and then, on the exhaust being suddenly opened, the friction of the sides of the interstices prevented the vapour from instantly getting free, and the internal pressure thus set up soon blew the lining to pieces, besides interfering with the rapidity of getting pressure within the cylinder at the commencement of the stroke and getting rid of it at the end. Mr. Lewis referred to hydraulic-pressed asbestos as a possible lining. If asbestos could be made perfectly impervious it would be a splendid thing, but he was not aware that this had been done in a suitable form for the purpose.

The President thought that the diagram of combustion showed too regular a dispersion of the atoms to be true; he would remind the meeting of some of those very elementary lessons on chemistry which all knew something about, he alluded to the natural diffusion of gases which seemed to spring from atomic antipathy, the very fundamental law upon which a gas exists, a tendency to diffuse or part from its own species. This law caused each atom of oxygen in the air to get as far from

its neighbour as possible, so that the diagram must be very near the truth. And in support of a complex combustion he would refer them to the diagram of Clerk's experiments on the explosion of Glasgow coal-gas and air (see plate 1) where it would be observed there was a distinct hump, indicating a distinct pause in the inflammation of the richer mixtures. The numbers indicated the parts of air to one of gas, thus number 13 meant 13 parts of air to one of gas, which was about the proportion commonly used in Gas Engines.

The diagram marked Guthrie, plate 4, was not actual but theoretical, and was made in comparison with the Otto diagram, with the object of challenging Clerk's typical diagrams, before referred to. It would be noticed that even with so early a cut-off as one-third of the stroke, No. 2 type was 20 per cent. superior to No. 3 type in power per stroke, and compared with the Otto 140 per cent. more powerful per cycle, together with four times the steadiness in full work and eight or ten times as steady under light work, for whole strokes in No. 2 type need not be cut out.

It was suggested that some men had used water in the charges partly as a lubricant, but he did not think a second look at the diagram was necessary to show that far more energy was absorbed by the water than was saved by the ease it gave as a lubricant.

The economy of compounding the Gas Engine may be in the future, but at present there was little hope for its accomplishment.

In answer to Mr. Dempster, pure oxygen instead of air would certainly give us very rapid combustion and very high temperature; and he might add, very high cost. But he could see nothing to be gained by using pure oxygen even if they could get it cheap. As it was they put more air with the gas to be burnt than was really wanted for combination; its primary use being the medium by which the dynamic energy of heat was made manifest and available, and its secondary use that of modifying the temperature and preventing such an excess as to endanger the cylinder and other parts of the engine.

Mr. Nasmith asked for more information as to why it was proposed to use a cool air injection instead of a water-jacket. Firstly, for the reason already stated, to save a good part of that present big loss of over 50 per cent. caused by water-jacketing. The water absorbed that amount of heat entirely to waste. Not so the cool air injection, for they must remember that as the cool air entered it absorbed the heat which was being conducted along the piston and cylinder, and in absorbing that heat expanded and gave out in work the full equivalent of the heat so absorbed, so that it was a genuine regenerative arrangement, and *no* heat was lost by it. And that he thought would be a very great stride beyond that which had ever yet been attained.

PLATES.

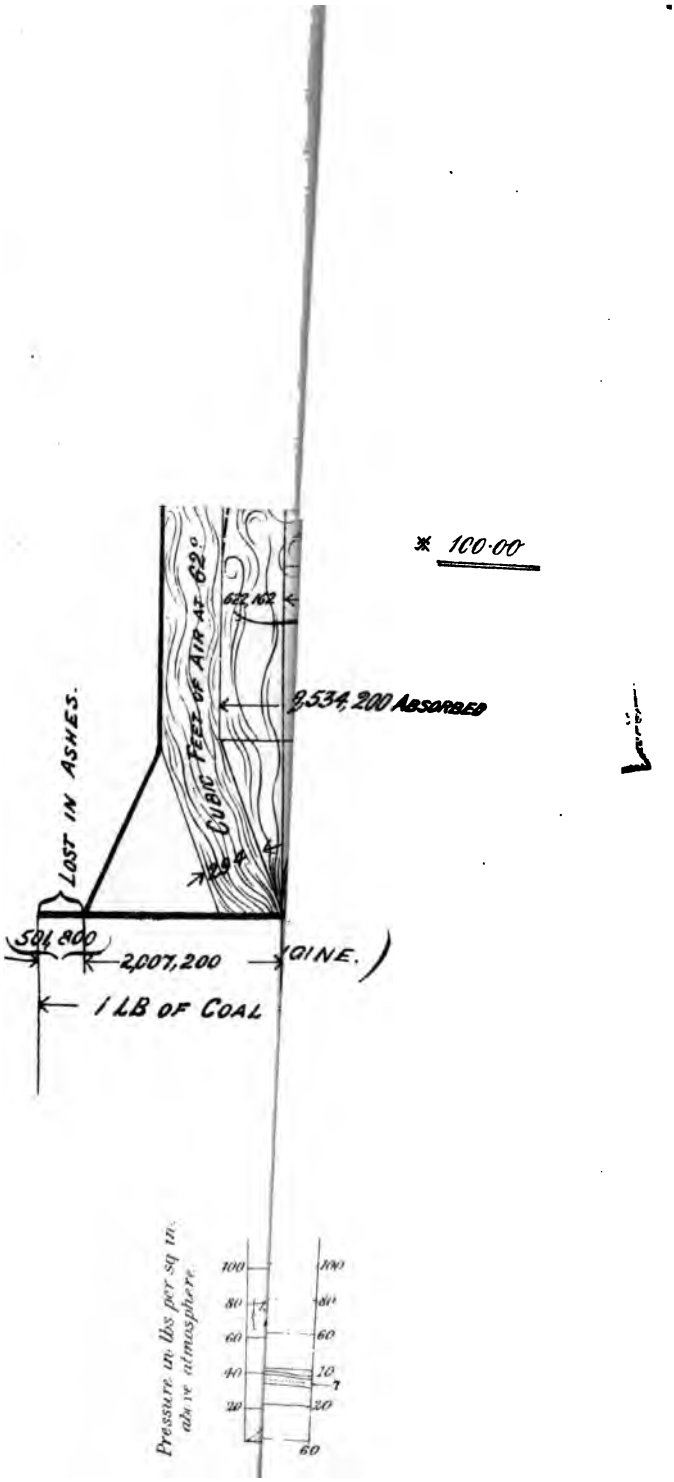
100·00
622,102
9,534,200 ABSORBED
CUBIC FEET OF AIR AT 62°
LOST IN ASHES.
504,800
2,007,200
(91 N.E.)
1 LB OF COAL
Pressure in lbs per sq in. above atmosphere.
100
80
60
40
20
60

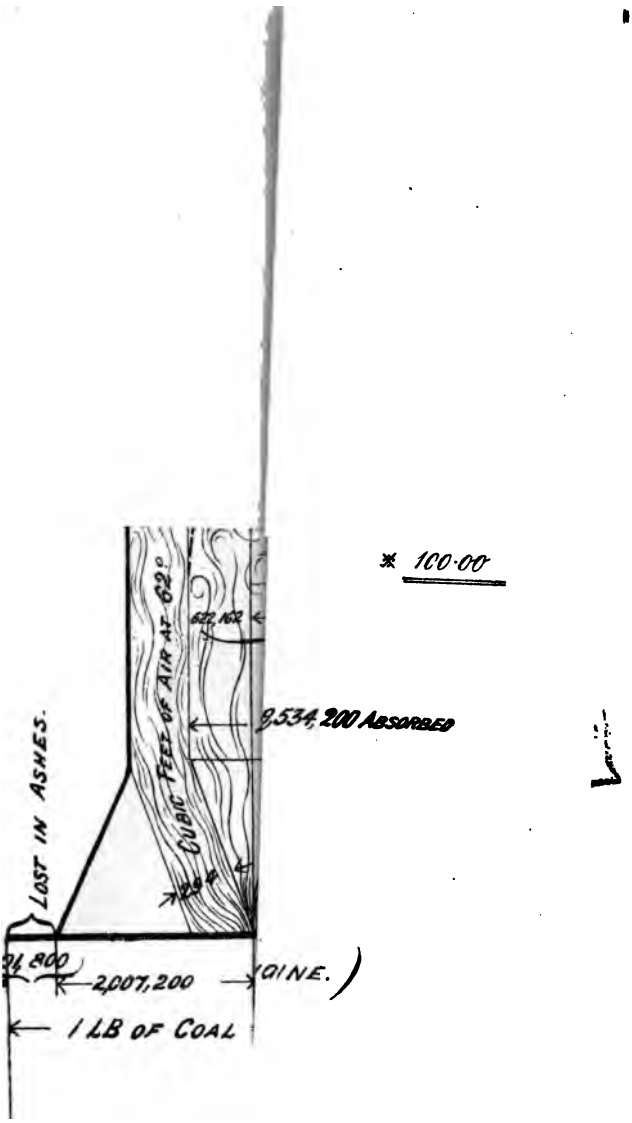
100·00
622,162
CUBIC FEET OF AIR AT 62°
9,534,200 ABSORBED
LOST IN ASHES.
34,800
2,007,200
(91 NE.)
1 LB OF COAL

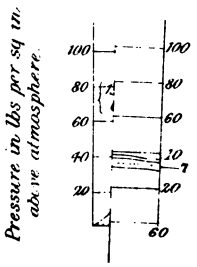
Pressure in lbs per sq in. above atmosphere.
100
80
60
40
20
100
80
60
40
20
60

RY
D
ONE

erections the world has ever seen, and it has become almost like a shrine, at which engineers of all nationalities have done homage, and though such wonderful feats of construction as the great Pyramid of Egypt have for century after century excited the wonder and amazement of the beholder, and increasingly so because of the appliances and tackle used in its erection being undefined and unknown, but to-day if such a structure had to be built, in all probability it could be done in about six years at a cost of say £3,000,000, the stone that would be required being 7,000,000 tons—in fact the same as in the Holyhead breakwater—yet the real difficulties that would have to be surmounted in its construction are much less in comparison than those of the Forth Bridge.

The Suez Canal cost ten times as much as the Forth Bridge, and the Panama Canal when completed will cost probably thirty times as much, and yet the engineering difficulties in these canals are comparatively simple, while such great engineering feats as tunneling the Alps only involved one kind of difficulty, that of hammering away at the face of the rock till a hole was got though, and though the Mont Cenis Tunnel, 7½ miles long, cost £3,000,000, and the St. Gothard Tunnel, 9⅓ miles long, cost £2,350,000, the last, the Arlberg Tunnel, 6¼ miles long, only cost £1,200,000, showing how the engineering difficulties met in the first Alpine tunnel have been surmounted in the last, the first costing £225 per yard run and the last only £108.

In designing the bridge to cross so wide and exposed an estuary as the Firth of Forth the engineers were met at every step with an infinite variety of unsolved problems, taxing to the utmost their experience and inventive genius, and these problems have only been solved after the most resolute application of well-tested mechanical laws and the results of careful and reliable experiments, and it is well within the mark to assert that this structure is not only one of the largest, but also one of the most difficult works the engineer has ever attempted to accomplish.

The Bridge is not only unique on account of its size but it is of a comparatively little known type, though the principles involved are very ancient, in fact as old if not even older than the arch or the suspension bridge, for it is probable that the

THE NEW YORK
PUBLIC LIBRARY

ASTOR, LENOX AND
TILDEN FOUNDATIONS
R L

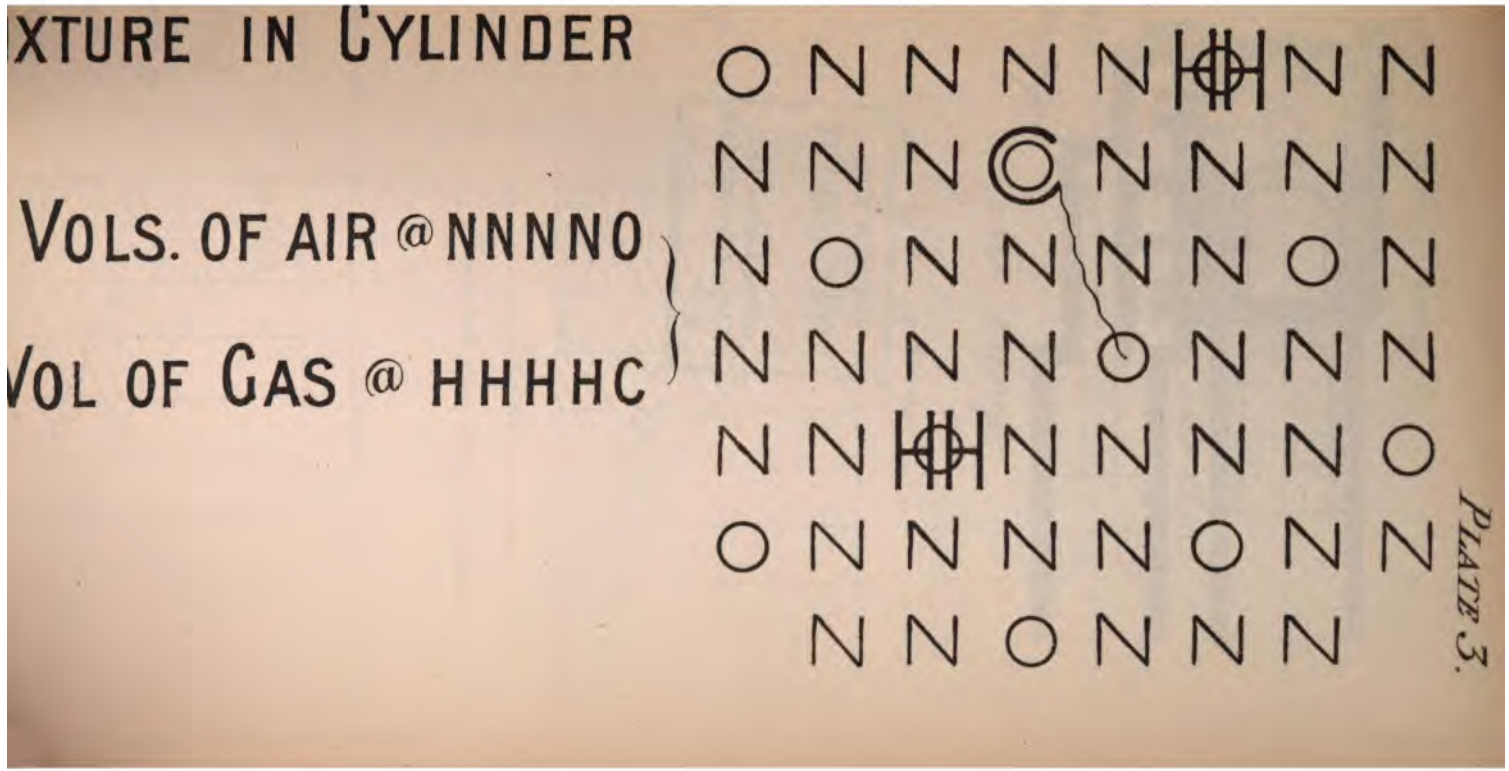

PLATE 3.

LIBRARY
NEVADA
VOLUME

watched with the keenest interest, and all the stages of manufacture and erection have been closely scrutinised.

The outer shells of the caissons are stiffened and strengthened on the inside by strong bracing with an inner skin, the annular space 7 feet in width, with vertical diaphrams, being filled in with solid brickwork and concrete well grouted in cement, and at 7 feet from the bottom four heavy lattice girders, 18 feet deep, with suitable cross girders, 3 feet deep, spaced 4 feet apart, span the whole area, and thus a strong bottom of iron is made, so that a clear space of 70 feet diameter by 7 feet high is left under this floor, to form a working chamber in which an average of 27 men were enabled to work in excavating the material at the base of the caisson. See Plate No. 2.

These caissons were first built on ways on the south or Queensferry side, and launched with sufficient ballast in them in the form of concrete, to ensure their stability while being towed out to their respective berths, where guide piles and dolphins were used to place them in correct position. Upon the top of the caissons there were built temporary wrought iron cofferdams, across these timber working platforms were constructed, cranes and concrete mixers fixed, and air pressure connections made good to the air compressing machine placed on the jetty alongside.

Each caisson when floated to its exact position was sunk by loading it with concrete, and when it landed on its bed then sinking operations commenced with a pressure of air pumped into the excavating chamber sufficient to drive out the water, the working chamber was illuminated by electric light, and communication was effected with it through three separate shafts as shown on Plate No. 2, with air locks on the level of the upper deck. The two shafts for the skips bringing up the excavated material were constructed with horizontal sliding shutters, worked by hydraulic rams in place of the usual swing door, the winding drum for bringing up the skips was in the lock itself, but the engine driving it was outside; on the skips arriving in the lock the lower slide was shut to, the blow-off cock opened for releasing the pressure, the top slide drawn back, and the hook of the discharging crane coupled to the skip by hand, the whole operation from arrival of the skip in the lock to its removal lasted only three-quarters of a minute, the sequence of the movements

being automatically controlled by interlocking gear; as a rule from 250 to 300 skips of excavated material were raised in 24 hours work by a force of from 20 to 30 men, the skips were 3 feet diameter by 4 feet 3 inches high, and the maximum number ef skip loads raised in one day by 33 men was 363, from the caisson of the South Queensferry piers.

The air locks in the third shaft for the men were constructed with a view of rapidly changing shifts, and had double chambers, each capable of holding seven men.

The four caissons for the South Queensferry cantilever tower were sunk through silt into the strong boulder clay constituting the bed of the Forth at that point, the silt overlying the harder deposit was quickly expelled from the working chamber, because the air pressure inside the caissons was ample to blow the silt—after being well diluted with water in a mud trough—into an ejection pipe having a suitable valve, and delivering the liquid mud at a point on the outside of the caisson above high water. See Plate No. 3. On reaching the extreme hard boulder clay, almost equal to rock, the ordinary spades were useless, and Mr. Arrol, equal to the occasion, designed hydraulic portable steel diggers or spades, actuated by hydraulic cylinders placed between the roof and the implements, and with this ingenious tool large lumps were excavated with comparative ease, for the hard stuff was sliced readily. During the working of the hydraulic spades in the stiff boulder clay which was fairly watertight, the exhaust water was gathered in a hole in the floor, where it rapidly accumulated, and to expel this exhaust water recourse was had to the simple device of allowing a suitable proportion of the compressed air to escape with the water into the ejection pipe, the effect being that the water was easily forced out in spurts and ejected at a point about 80 feet above the level of the working chamber. In sinking the caissons through the silt great care was required, the men at work on several occasions having a near escape. The south caissons were sunk about 20 feet through the silt and 10 feet into the hard boulder clay, the maximum depth attained being 91 feet below high water. See Plate No. 1.

In sinking the caissons it was found that the working chamber

123

EW YORK
LIBRARY
TOR, LENOX AND
TILDEN FOUNDATIONS

THE TECHNICAL

)UCATION OF ENGINEERS.

A course of study recommended by

The Manchester Association of Engineers.

MANCHESTER:

'ERALD & WALKER, PRINTERS, BACK POOL FOLD, OFF CHAPEL WALKS.

1888.

OFFICERS.

1888.

President:

MR. SAMUEL DIXON, M. INST. M.E.

Past-President:

MR. ALDERMAN W. H. BAILEY, J.P.

Treasurer:

MR. HENRY MAINWARING.

Trustees:

MR. R. RAWLINSON,
" G. CARTER,
MR. E. ASQUITH,
" J. WALTHEW,
MR. THOMAS ASHBURY.

Council:

MR. C. FARMER,
" S. BOSWELL.
" W. TAYLOR,
MR. J. HARTLEY,
" W. LAWSON,
" S. ECROYD.

Secretary:

FRED. WALTHEW,
31, Shrewsbury Street, Old Trafford, Manchester.

Assistant Secretary and Librarian:

FRANK HAZELTON,
15, Raglan Street, Hulme.

Extreme care had to be taken in the sinking of these caissons, for there being no silt over the rock, the pressure of air inside the caisson was that due to the depth of water outside, and with the varying heights of the tide some sensational blows occurred, and the great pressure of air that had to be pumped in to overcome the head of water at a very high tide was equal to 35lbs. per square inch above atmosphere, and under this great pressure the workmen could only work four-hour shifts. The last of the deep-water caissons was got down to its final depth in October, 1886.

At North Queensferry, on the Fife side, the four main piers were built on dry land, or within timber and clay cofferdams.

The firm of M.M. Convreux & Hersent, of Paris, who had trained a body of Belgian and Italian workmen to excavate under high air pressure, in the Antwerp harbour improvement works, contracted for and supplied a staff of experienced submarine navies, under the charge of M. Coisseau, to do the requisite work in the air chambers at the bottom of the deep-water caissons.

In sinking these enormous caissons by the pneumatic system, it is a source of gratification to find that no lives were lost during this hazardous and dangerous submarine work, though the elements of danger were not lacking, for on one occasion a few men were buried in the mud right up to their chins, but were all safely rescued, and another occasion the sinking of the ponderous caisson by a sudden drop of 7ft. at once, startled the men, but fortunately they escaped unhurt.

Casual visitors to the men working in the high air pressure at the bottom of the caisson, were in danger of having the drums of their ears broken; one visitor who went down fortified himself with a glass flat-sided spirit flask, which he emptied while down below, when as a matter of course the bottle was filled with compressed air at about 30lbs. per square inch, and on arriving at the air lock on his exit, and gaining the normal atmosphere the bottle burst, much to his surprise.

During one of the sensational blows, that occurred occasionally when the compressed air was rapidly escaping under the edge of the caisson, and causing a violent commotion in the sea-way outside, some salmon attracted by the stir and the noise, headed

form a very fairly graduated and complete course of evening study in each of the different branches, and are therefore strongly recommended, but it must not be understood that they are the only suitable ones, for many of the classes to prepare pupils for the examinations of City and Guilds of London Institute, and the Engineering courses of many of our Colleges and Schools cover the same ground and may therefore be taken with equal advantage.

Another reason why the classes in connection with the Science and Art Department are recommended is, that upon the results of these examinations the Whitworth Scholarships for Mechanical Science are awarded, so that should a youth after a few years steady work find himself able to enter the competition for these Scholarships, he will find that his studies will prove directly available to him. Full particulars of the extent of reading required for the different stages in any of these branches of Mechanical Science will be found in the Whitworth Prospectus, to be obtained from the Secretary of the Science and Art Department, South Kensington. Post free, 3d.

A youth is strongly recommended not to have any hesitation about entering upon the study of any of the various subjects, for there is no difficulty which cannot be surmounted with a little effort, provided that he has had but the plain education given in any of the elementary schools, and passed, say the 4th, but preferably the 6th standard.

Table No. 1. This gives a tabulated list of the different branches of science entering more or less into Engineering work, but a youth need not be discouraged with it for it is far less formidable than it seems.

Each subject is arranged in the graduated manner above referred to, and the letters E, A, and T represent respectively an "Elementary" "Advanced" or "Thorough" knowledge such as is required for the Honours stage in each subject. In the *First Column* arrows are used to indicate those subjects which are considered *absolutely essential* for all youths no matter how occupied. The *Second Column* indicates the extent of reading and the branches which are *highly desirable* for every youth. The remaining columns, as will be noted from their headings,

materials as the masonry in the main cantilever piers. The piers on either side nearest the centre of the stream having to receive the shore ends of the cantilevers, are much stronger and higher than the others; the viaduct piers were built to a height of about 18 feet, and then left till the girders to span them were ready; the girders were built on a wooden staging alongside the piers, and were about 340 feet each long, that is sufficient to span two piers; when ready they were slided across the piers, steel cross beams with pairs of hydraulic jacks were placed under the ends of the girder over the piers, a workman's stage surrounding the piers was suspended from the girders, and from these platforms the men in charge of the hydraulic rams raised the whole length simultaneously one foot high, when they were temporarily packed up, another foot lift was then taken, then a third, till the whole length of girders was raised three feet above the masonry, then the masons built up the piers as far as the girder, then after some 36 hours rest for the cement to set, another lifting process, and so it was continued till the viaducts and the piers attained their final position in July, 1887. The girders themselves, during construction of the piers, formed a roadway along which all the materials required was conveyed, and by winches lowered over each pier as the masons required it; this system of building high girders is one peculiar to Mr. Arrol, and adopted by him several years ago, and it dispenses with the use of costly scaffolding, besides being a much more workmanlike and ingenious method of raising the structure.

To allow for expansion and contraction of the viaduct girders suitable provision was made between each 340 feet length. The approach girders, which were made in Glasgow by Messrs. P. and W. McClellan, and the ironwork of the caissons made in Glasgow by Messrs. Arrol Bros., are the only parts of the bridge that have not been made at the Forth Bridge Works.

The girders are of the lattice form and are 21 feet 3 inches deep, and the full width for a double line of rails being laid on the top of them, they are made with expansion joints at every other pier, that is on the southern side with ten piers there are only four fixed lengths of girders, each about 340 feet long.

The arches approaching the viaduct are also faced with

TABLE No. 1.

		Absolutely essential for all grades.	Highly desirable for every youth.	Engineering Clerks.	Draughtsmen.	Millwrights, Pattern Makers and Moulders.	Smiths, Boiler Makers, Bridge Builders, and Plate Workers Generally.	Erectors, Fitters and Turners.	Planers, Shapers, and Machine Men generally.	Engineering Chemists.
Freehand Drawing ...		←	←	←	←	←	←	←	←	←
Practical, Plane and Solid Geometry	E.									
	A.		←			←			←	←
	T.			←						
Machine Drawing...	E.	←						←		
,, ...	A.		←	←	←	←	←		←	←
,, ...	T.			←						
Mathematics Stage	1	←		←	←	←	←	←		
,, ,,	2		←							
,, ,,	3			←					←	←
Applied Mechanics	E.	←		←				←		
,,	A.		←		←	←	←			←
,,	T.			←						
Theoretical Mech'cs	E.		←			←	←			
,,	A.			←						
,,	T.									
Steam	E.				←			←		
,, ...	A.		←			←	←			←
,, ...	T.			←						
Sound, Light & Heat	E.				←		←			
,, ,, ,,	A.		←	←		←				
,, ,, ,,	T.								←	←
Magnetism & Elect'y	E.		←							
,, ,,	A.									
,, ,,	T.								←	←
Chemistry (Inorg'c)	E.		←							
,, ,,	A.									←
,, ,,	T.								←	
Metallurgy	E.		←		←	←	←			
,, ...	A.									
,, ...	T.								←	
orthand				←						
ch			←	←	←		←			←
n									←	

TABLE No. 2.

Year		1st	2nd	3rd	4th	5th	6th
Freehand Drawing...		←	←				
Practical, Plane and Solid Geometry	E.	←					
	A.		←				
	T.						
Machine Drawing	E.	←					
,, ...	A.		←	←			
,, ...	T.						
Mathematics ... ... Stage	1	←	←				
,, ... ,,	2			←	←		
,, ... ,,	3						←
Applied Mechanics... ...	E.	←					
,, ...	A.		←	←			
,, ...	T.						←
Theoretical Mechanics ...	E.			←			
,, ...	A.				←	←	
,, ...	T.						
Steam	E.				←		
,, ,, ,,	A.					←	←
,, ,, ,,	T.						
Sound, Light and Heat	E.			←			
,, ...	A.				←		
,, ...	T.						
Magnetism and Electricity	E.					←	
,, ,,	A.						
,, ,,	T.						
Chemistry (Inorganic) ...	E.					←	
,, ,, ...	A.						
,, ,, ...	T.						
Metallurgy	E.						←
,, ...	A.						
,, ...	T.						
French						←	←

Freehand Drawing. It is highly important that youths shall be able to make fairly proportionate sketches of any piece of mechanism, so that if engaged upon any piece of work which it is necessary to modify, they may be able to prepare a neat sketch with all the essential dimensions, which shall convey a correct impression and permit of the article being made, or complete drawings prepared from it. By means of a sketch it is possible to convey a correct idea of complicated forms of mechanism when it is impossible to do so by words. This useful art can be easily acquired by steady private practice commencing with simple forms, following the principles used in mechanical drawing, but making the sketches with pen or pencil without the aid of instruments.

Practical Plane and Solid Geometry. This course of Geometry is particularly useful to those who have but little opportunity of acquiring an extended knowledge of Mathematics, as its study enables almost all the chief Geometrical problems which occur in engineering to be solved practically with the aid of instruments only. To all students this subject is useful and should be studied at the same time as Mechanical Drawing of which it is really a branch, the reading being extended to a first class in the advanced stage, but for Draughtsmen particularly a *thorough* knowledge should be acquired.

Books:	Plane and Solid Geometry.	*H. Angel.*	1s. 6d.
	Do. (advanced)	*Do.*	10s. 0d.
	Do.	*Edgar & Pritchard.*	4s. 6d.

Mechanical Drawing. The really essential feature in this branch is not so much to acquire the power of making highly finished drawings and becoming expert draughtsmen, as to be able to understand the principles thoroughly, and make clear *working* drawings, not simply pictures, however pretty they may be.

The examples found in the workshops will probably prove better types of recent practice than any met with in the schools; these therefore should be carefully studied. The two chief points to attend to are thoroughness and clearness; every youth should acquire this power, but in the case of those being trained for draughtsmen it is very probable that the practice in the drawing

office will be all that they will require; but it must be borne clearly in mind that the value of a draughtsman is not simply that of a line maker, but in his fertility in designing new mechanism to suit the various conditions and improvements demanded by increased experience. It is recommended to every youth to continue his work until he shall have acquired a 1st. class in the advanced stage of Machine Construction and Drawing.

Books:	Machine Construction and Drawing.	*Cryer & Jordan.*	2s. 6d.
	Elements of Machine Design.	*Unwin.*	6s. 0d.
	Orthographic Projection.	*Binns.*	9s. 0d.

Mathematics. This is the branch of all others which usually seems to a youth the most difficult to enter upon, for to most the very names of Algebra and Euclid convey a shudder, the study being regarded as something equivalent to that of Greek. This, though very natural is an utterly groundless fear and arises usually from seeing perhaps in text books some of the more complicated mathematical expressions, which are not understood, because the simple alphabet of the science has never been acquired. The elementary portions can be read by any youth of ordinary intelligence and although an extended knowledge may never be attained, yet it is most important that every one should be able at least to understand the simpler forms of algebraic expressions, with a view of being able to apply correctly in any engineering work, the formulæ which have been established by others, and are now usually collected in engineering note books.

It is particularly recommended that a youth should attain an average facility in the use of figures, particularly decimal fractions, before entering upon the study of algebra.

It is also recommended that *every* youth should master what is required for a 1st class in the first stage, viz: Arithmetic, Algebra as far as simple equations, and the first book of Euclid, but it is highly desirable that every youth should extend his reading to what is required for a 1st. class in the second stage, or certainly as far as the Binomial Theorem in Algebra, the 6th book of Euclid (omitting the 5th), Plane Trigonometry as far as the solution of triangles, and the theory of Logarithms.

In the study of Euclid attention should be given mainly to the *Problems*, in the solution of which considerable facility should be acquired, for the bare acquaintance with the theorems often acquired in a parrot-like fashion is of very little use in developing the reasoning faculties.

The higher branches of Mathematics such as Analytical Geometry, the Differential and Integral Calculus, though amply repaying a careful study, do not enter largely into general engineering work. Any student, however, who sets before himself a higher standard than what is here sketched out as highly desirable, will find it much to his advantage to give the greatest attention to mathematics, for with a competent knowledge of mathematics the reading of all other branches of mechanical science becomes an easy matter.

Books:	Arithmetic.	*Colenso.*	4s. 6d.
	Elementary Geometry.	*Wilson.*	4s. 6d.
	Euclid.	*Colenso.*	4s. 6d.
	Algebra for Beginners.	*Todhunter.*	2s. 6d.
	Plane Trigonometry.	*Walmsley.*	2s. 6d.

Theoretical Mechanics. Under this heading is generally studied the application of mathematics to the accurate determination of the chief natural laws and the principles of the various combinations of mechanism studied under the heading of Applied Mechanics.

Before entering upon this subject, a knowledge of elementary Algebra and Euclid is essential, and the elements of Trigonometry is very desirable, hence it is recommended that this subject should be deferred until at least a 1st. class certificate in the 1st stage of mathematics shall have been acquired.

The average pupil need not extend his reading beyond what is required for the Elementary stage in this subject, but for those qualifying for the higher branches the study may be extended with advantage to what is required for a 1st. class certificate in the Advanced stage. The reading for honours in this subject, though an exceedingly good mental training is scarcely profitable.

Attention should be particularly given to the great principles

of "Work" and that of "Virtual Velocities," for by the easy application of these principles many of the chief problems in mechanism can be solved with the greatest ease and in the most practical manner.

Books:	Mechanics and Mechanism.	*Tate.*	3s. 6d.
	Mechanics for Beginners.	*Todhunter.*	4s. 6d.
	Mechanics.	*Wormell.*	4s. 0d.
	Do.	*Deschanel.*	4s. 6d.

Applied Mechanics. Next to Mechanical Drawing this is the most important branch of study. Under this heading are embraced the study of those principles which enter into the construction of all kinds of mechanism, such as the various combinations of the lever, the screw, the wheel and axle, the inclined plane, &c., the physical properties of the different materials used in mechanical engineering, such as the strength of the different materials whether in simple forms or in structures, as beams, girders, chains, &c. The greater part of the work under this heading can be easily read by any youth possessing only a knowledge of arithmetic. It is particularly recommended to every youth to enter for this branch and continue his studies until he has at least obtained a 1st class in the examination for the advanced stage. The more advanced youths, particularly those intending to become draughtsmen, may with advantage read for honours in this subject, as the whole range comprised under this head will be found of great service in later years.

Books.	Strength of Materials.	*Anderson.*	3s. 6d.
	Principles of Mechanics.	*Goodeve.*	6s. 0d.
	Applied Mechanics.	*Cryer & Jordan.*	3s. 0d.

Sound, Light and Heat. Of the three branches of science here grouped together, the one by far the most important, and requiring the most diligent study, is that of *Heat.* Of Sound and Light the pupil will not (except in special cases) have need to extend his reading beyond what is necessary to determine the nature and properties of Sound and Light, together with their simple laws which can be easily studied without the application of mathematics; but with respect to *Heat,* a *thorough study* is recommended for every pupil, for this

form of energy is the one entering most largely into engineering work, and will be met with on every hand. A study of all these branches should be continued until the great principle of the Conservation of Energy is fully grasped and can be traced through all the chief branches of science. A thorough study of the small work on Elementary Physics, by the late Professor Balfour Stewart, will give all that is fairly required under the heading of Sound and Light, together with a good introduction to the important science of Heat. The treatise on Heat by the same author should then be thoroughly mastered. What is required for the elementary stage should be mastered by every youth, but the reading may with advantage be extended to what is required for a 1st. class in the advanced stage.

Books:	Elementary Physics.	*Balfour Stewart.*	4s. 6d.
	Treatise on Heat.	*Do.*	7s. 6d.
	Conservation of Energy.	*Do.*	5s. 0d.
	Heat a Mode of Motion.	*Tyndall.*	12s. 0d.
	Physics.	*Ganot.*	15s. 0d.

Magnetism and Electricity. With the elementary portions of this branch everyone is recommended to make himself familiar, and for general engineering students what is required for a 1st class certificate in the elementary stage will be sufficient; but for anyone engaged in the construction or manipulation of electrical machinery, it is of the utmost importance that a thorough study should be undertaken even at the neglect of other branches. The elementary stage may be entered upon without any special knowledge of mathematics as the whole science is very largely treated from the experimental point of view. These together with the kindred branches of Sound, Light and Heat, will be found very interesting branches of study, which may be read with advantage as a recreation along with those requiring much deeper thought, such as *Mathematics* and *Theoretical Mechanics*.

Books:	Elementary Physics.	*Stewart.*	4s. 6d.
	Electricity and Magnetism.	*Deschanel.*	4s. 6d.
	Physics.	*Ganot.*	15s. 0d.
	Electricity in Theory & Practice.	*Fiske.*	10s. 6d.

It has often been asked how is such a huge steel structure to withstand the strains consequent on the various changes of temperature. This subject has been very carefully worked out and provided for by the designers.

As a general rule it is considered ample to provide in bridges half an inch for each 100 feet for expansion and contraction, but in the Forth Bridge no less than one inch for every 100 feet has been allowed, and this allowance provides therefore in the full length about seven feet for expansion and contraction.

The method of allowance in the base of the three huge towers and also in the viaducts has already been alluded to, but it is well to note that laterally the play is limited, so that the whole of the piers may act in concert to resist combined action of all forces tending to disturb the normal state of rest of the 53,000 tons of permanent load.

Many people have an incorrect idea in assuming that the centre girder of 350 feet in the centre of the two large spans form a kind of keystone; this is not so, for each cantilever stands on its own base, and at its extremities provision is made for expansion, as each end of the centre girders is free to elongate, the rails being for some distance cut diagonally, the tapering running in the direction the train will go.

The cantilever bridge in principle carries out the idea of a perfect balance, so that on the right and left of the central towers the weight is the same. See Plate No. 1. On the centre pier on Inchgarvie it is readily seen that this is carried out, but on the north and south main piers it will be noticed that the stone piers at the shore ends are reached without an intermediate girder as in the centre, so that in order to preserve the balance and compensate for the weight of the 350 feet centre girders (over 1,000 tons each) the ends of the cantilever arms at the shore ends are extended 9 feet 9 inches longer, and when landed in the shore masonry piers are weighted with several hundred tons of extra material, so that each of the three main pier cantilevers will stand on its foundations perfectly balanced on all sides.

If the remarkable iron bridges of wide spans, built by Brunel at Saltash, and by Robert Stephenson across the Menai Straits, after thirty years are found to be amply strong enough for all

however, employed in the production of steel, &c., a more extended knowledge is required, certainly not less than a 1st class in the advanced stage.

Books: Metals, their properties and treatment.	*Bloxam.*	5s. 0d.
Metallurgy. (vol. 1.)	*Greenwood.*	3s. 6d.

Steam. This comprises the study of all the chief types of engines and boilers, as well as the chief appliances connected with the generation of steam and the production of motive power by its agency. To all classes of engineering students this is a very important branch, and may be entered upon without any special preliminary knowledge, except perhaps a knowledge of arithmetic so far as decimal fractions. It is however, strongly recommended that before entering upon this branch, attention should be given to the careful study of the science of Heat, and during the study to trace the action of heat so as to see clearly that these structures are really heat engines, and particularly to master the application of the great principle of the Conservation of Energy, and see how thoroughly it is illustrated in the different types of steam engines.

The systematic study of the different types of engines, &c., here required, may however, be left to the last years of apprenticeship or even later, as a careful study of the principles of mechanism upon which these are constructed is in the first instance of greater importance. These are usually studied under the heading of applied mechanics.

Books: On the Conversion of Heat into Work.	*Anderson.*	6s. 0d.
Steam and Steam Engines. *(recent edition).*	*Jamieson.*	7s. 6d.
Steam Boilers.	*Wilson.*	6s. 0d.

French. To many the insertion of this subject among those desirable in a good technical education may seem out of place, but to those qualifying for the more important situations among mechanical engineering, it is very desirable that they should acquire the capacity to speak and write the French language with moderate fluency; and here a word of warning. In *commencing* the study be particularly careful to get a correct pronunciation from a good master, for should an incorrect one be at first acquired, it will be found a great hindrance for many years.

French is recommended rather than German, because it is so much more generally known in those countries where English engineers are at all likely to find employment and have occasion to visit. For first class engineering clerks an additional knowledge of Italian and Spanish is rapidly becoming indispensable.

Engineering Clerks. Assuming that a good general education has been received before entering upon regular office duties, a youth will find it very advantageous to enter at once upon the study of another language, say French, this being one of the best means of improving the knowledge of our own. Of the several branches indicated in Table No. 1, those perhaps to which the greatest attention should be paid are Freehand Drawing, French, and Shorthand. Freehand Drawing is required on account of the numerous sketches received and sent out in the regular correspondence, and the ability to intelligently understand a sketch or express an idea by this simple means is of very great importance. The elements of Machine Drawing, Applied Mechanics and Mathematics are introduced for the same reason, for in an engineering office an immense number of drawings have often to be dealt with and estimates prepared from them, upon which the success of an engineering works often depends.

Draughtsmen. It is desirable, and indeed almost essential, that a youth should first master one of the chief branches in the workshops before entering the drawing office, but in any case an intelligent interest should be taken in all the work in progress with a thorough determination to master the principles of its construction. In this respect a youth should note that he will never be *taught* his business, but will have to *acquire* it almost entirely by his own observation and enquiry. Pure Machine Drawing will be best acquired in the work's drawing office, but a thorough study of Practical Geometry should be made so as to grasp fully the geometrical principles employed

in the various elements of mechanism. The chief branches to which attention should be directed are Mathematics, Applied Mechanics and Steam, of which a wide knowledge should be obtained. It should however be always remembered that they give a knowledge of principles only, the power to apply them accurately in all cases can only come of experience gained in the workshops. The knowledge of an additional language, such as French or German, will prove of considerable commercial value, and should not be neglected.

The Millwright, Pattern-maker and Moulder. A good knowledge of drawing is essential both to the Pattern-maker and the Millwright, for both have to produce intricate patterns or other structures from drawings alone. The Pattern-maker must understand drawings so fully as to be able to build up complicated forms from the rough timber, without any other guide than the drawing itself. Obviously, the quickest way of understanding a drawing is to be familiar with the method by which it is made, in order to follow step by step the development of the draughtsman's design An ability to grasp rapidly the intention of a design will thus be aquired, and the workman will thereby become quicker and more reliable in his work, and will on that account be more highly appreciated by his employer; he will moreover be ready equipped with the necessary knowledge should an opportunity of improving his position occur. To the Millwright a good knowledge of Applied Mechanics will be found most helpful. It treats of the proper way to proportion the teeth of wheels and to draw the curves of their faces; it shows how to calculate the sizes of pulleys to work at given speeds when driven by existing pulleys; it gives the strength of beams, shafts, pipes, bolts, chains, bars, &c.; the power of lifting tackle and the friction of machines. The Pattern-maker will gain an insight into the effect of crystallization on the strength of different forms of castings, the strength and properties of timber, &c. This subject will teach the Moulder the principles of the action of fans and blowers, and the power required to drive them. An elementary knowledge of drawing will in general be enough for the Moulder, who should devote a portion of the time spent by

the Millwright on that subject to the subject of Metallurgy, so far as it relates to the manufacture of iron, steel, copper, tin, and zinc. Useful information on the differences in pig iron will be gained, as well as an idea of the detrimental effect of various impurities such as sulphur and phosphorus, &c.

Mixing of metals is a subject deserving of the greatest attention, but unfortunately there is very little information upon it obtainable outside the workshops and foundries. The result of the mixture of two or more brands of iron in the cupola can be roughly foretold, but the exact and specific result can only be known after considerable experiment, and in too many instances information obtained after long experience is treated as a trade secret, and is jealously guarded by firms who have gained a reputation for making certain special kinds of castings. The Moulder should therefore seek to acquire this information by observation of that which goes on around him in his daily work.

Steam and Heat are subjects of such great importance that the value of a knowledge of the constructive details of engines, and of the mode of their working, will be sufficiently obvious without further comment. Without the Elementary Mathematics required by Table No. 1 the other subjects cannot properly be understood.

Boiler-Makers, Smiths, Bridge-Builders, and Coppersmiths. With a knowledge of *Freehand Drawing* the youth or man will at all times be able to express his ideas more clearly than by any written description, he will also be able to make his own sketches for such work as extensive repairs or alterations to Boilers, Bridges, Pans, Pipes, or Iron or Copper Plate work generally, which sketches with a few dimensions will often serve the purpose of a more elaborate drawing. *Solid Geometry* will enable those who have only a fair knowledge of it, to lay out on the flat plate such forms as the following: dome bases, manhole seatings, intersections of cylinders, branches on pipes, camber in conical plates, large wrought iron elbows, stand pipes, spherical shaped ends, and peculiar shaped kiers

and pans, all of which can be developed or laid out in the flat. Without a knowledge of geometry a man never becomes a reliable template worker or setter out of work. *Machine Drawing* is essential to enable a youth or workman to thoroughly understand and be able to work to a drawing, but he will never really enjoy being able to do so until he can make his own drawings. He will find a most valuable pastime in making a freehand sketch of any article not usually met with and then from his own notes make a mechanical drawing of the same in his leisure hours. This subject will give him a thorough knowledge of the proportions of bolts, pins, stays, cotters, rods, and other details, so very often met with and yet so varying in size and form.

Mathematics will enable him to make his own calculations as to strength, weight, size, area, &c. of any work much more easily and quickly than by ordinary arithmetic. In *Applied Mechanics* will be found that knowledge which is so useful, viz: understanding the principles and actions of the machinery in use. Thoroughly understand the principles and the remainder comes easy, so that when a machine, crane, or hammer goes wrong there is no need of dependence on the maker to put it right. *Sound, Light, and Heat* are subjects not difficult to learn, and very useful, especially *Heat*, which plays so important a part in the career of a Smith or Boiler-Maker and the articles they make. *Metallurgy* or such portions of it as refer to iron, steel, and copper are useful, for by means of this knowledge the extent of the influence of the various operations on different materials is known. *Steam* and its capacity for work should be studied by the Smith and Metal Plate Worker just as much as by the Engine Maker, for the Coppersmith and Boiler-Maker make and equip the steam generator. The Smith uses steam largely in hammers, and the Bridge-Builder is greatly dependent on machines, cranes and other appliances worked by steam.

Erectors, Fitters, Turners, and Machine Men. Apprentices classed in the above branches of the mechanical trades should commence work in the shops between the ages of 14 and 16 so that they serve at least 5 years to that branch of the trade which suits their ability and circumstances best, before they come of age.

Turners and Machine-Men should pay special attention to the marks indicating the subjects they should learn, especially Mechanical Drawing and Applied Mechanics, also to the nature and composition of Metals, as they require to know the metal they are cutting, the quickest speeds they can work the same, and the kind of tools best suited to the work. Turners require a sufficient knowledge of Mathematics to enable them to calculate the wheels required for the cutting of all kinds of screws to the Whitworth or any other standard.

Erectors and Fitters must work hard at the subjects indicated, especially Mechanical Drawing, Mathematics, and Applied Mechanics, they should also get a fair knowledge of Metals and a thorough knowledge of the properties of Steam. If a youth is well up in these subjects at from 19 to 20 years of age, and has ability for design and construction, he should be taken into the drawing office, as such young men make good draughtsmen. At this time if possible they should learn the French language to enable them to translate specifications, to go abroad to fix machines and engines, and to transact any mechanical or commercial business their employers may require.

At about 20 years of age, if a young man has extra ability, he should work at the higher grade subjects, which will enable him to compete for a Whitworth or other Scholarship. A knowledge of the strength of Metals is highly desirable, as by the use of too light a chain or other appliance accidents may happen and cause destruction of property or loss of life.

There is no necessity for Apprentices at these trades to work in the evening with tools in the Technical Schools, as they will be engaged in the practical part of the trade during the day, unless some of them would like a little practice at Smithing, Model Making, or some special branch.

Suppose a young man out of his time who is a good workman and has followed up the subjects mentioned as best suited for him to learn, there is no position in the Mechanical trades but what it is possible for him to attain with patience and perseverance.

Engineering Chemists. In addition to the course of Pure Science recommended in Table No. 1, the student will find it of great advantage to secure, if possible, a workshop training for 3 or 4 years in one of the chief branches of engineering, prosecuting his studies at the same time in Practical Geometry and Machine Drawing, together with the elementary portions of the other branches of science at evening classes. He should however give his chief attention to Chemistry, particularly Laboratory Practice, adding thereto the study of Metallurgy and Mineralogy as opportunity offers. Though Mineralogy is not given in Table No. 1, a knowledge of it is very essential, and the reading should be extended until a 1st. class in the advanced stage has been obtained.

After a good general knowledge has been obtained, the pupil should spend from 1 to 3 years in the laboratory of some engineering works where experience in general practical analysis would be obtained.

Should the student be fortunate enough to obtain one of the "School of Mines" or "Whitworth" Scholarships, he would find the experience gained by a course of training in the laboratories of The School of Mines or The Owens College to be invaluable.

A knowledge of both French and German would prove very useful, but that of German is really essential, not so much for its direct commercial value, as for the necessity which a Chemist finds to keep himself fully conversant with the contemporary work of German Chemists.

128

147.

THE NEW YORK
PUBLIC LIBRARY

THE FORTH BRIDGE.

A PAPER

READ BY

MR. THOMAS ASHBURY, C.E.,

(Member of the Association.)

On 10th NOVEMBER, 1888,

AT THE GRAND HOTEL, MANCHESTER.

MR. SAMUEL DIXON, M.Inst.M.E., President,

IN THE CHAIR.

MANCHESTER:
HERALD & WALKER, PRINTERS, BACK POOL FOLD, OFF CHAPEL WALKS.
1888.

OFFICERS.

1888.

President:

MR. SAMUEL DIXON, M. INST. M.E.

Past-President:

MR. ALDERMAN W. H. BAILEY, J.P.

Treasurer:

MR. HENRY MAINWARING.

Trustees:

MR. G. CARTER,	MR. J. WALTHEW,
,, E. ASQUITH,	,, T. ASHBURY, C.E.

Council:

MR. C. FARMER,	MR. J. HARTLEY,
,, S. BOSWELL.	,, W. LAWSON,
,, W. TAYLOR,	,, S. ECROYD

Secretary:

FRED. WALTHEW,

31, Shrewsbury Street, Old Trafford, Manchester.

Assistant Secretary and Librarian:

FRANK HAZELTON,

15, Raglan Street, Hulme.

THE FORTH BRIDGE.

In this country many of the tidal estuaries and rivers have proved to be a provoking barrier to the connection of many important railways, and the ingenuity of railway engineers, and the practical skill of railway contractors have been severely taxed in overcoming these natural obstacles to making unbroken and direct routes, so as to avoid the inconvenience, danger and delay of a steam ferry service.

In some cases this has been successfully achieved by the bold course of tunneling under the tidal water, as under the Thames below London Bridge, the Severn at Portskewet, and the Mersey at Liverpool, while in other instances successful triumphs have been attained by the erection of bridges, varying in designs and novel in character, such as the Saltash Bridge near Plymouth, the bridge over the Severn at Sharpness, the Britannia Tubular Bridge across the Menai Straits, the Mersey Bridge at Runcorn, the Kent and Leven Bridges near Ulverston, the High-level Bridge at Newcastle, and the new Tay Bridge at Dundee; the successful accomplishment of these and other bridges have led up to the erection of the Forth Railway Bridge, the boldest in design, the highest structure, the longest span, and the most famous of them all, and which when completed at the end of 1889, will unite the South and North Shores of the Firth of Forth below South and North Queensferry. A reference to the railway map of Scotland will show how highly desirable and how great an advantage it will be to have a railway bridge at this point, so that the Southern Railway systems using the east coast route, going north of Stirling, may be saved from the detour through Stirling and have direct access to the rich mineral fields of the County of Fife, the important manufacturing industries of Forfarshire, the large cattle and farming produce and the productive fishing industries of the north-eastern counties of Scotland. It is estimated that the saving of time by using the Forth Bridge route from Edinburgh to Perth and the north will be two hours.

The speed of our express trains has during the last few years been steadily increasing, this being the result of the rivalry existing between our railway companies, which has reached its climax in what has been most appropriately named the race to the north. The interest which has been excited throughout the country by this terrific race, added to the intrinsic merits of the engines themselves, claims priority for this class. Locomotives are now running intended to attain very high speeds with heavy trains, and those who have watched the development of the locomotive in size and power know that there is a growing desire for still higher speeds.

It is the opinion of many that our railway companies could if they liked easily increase the speed of their fast trains; as a matter of fact this is not so, as the engines as a rule are doing as much as they possibly can, and are so nicely and delicately timed that the slightest error of judgment on the part of the driver, results in the train being late.

It might be thought that an addition of five or six miles an hour to the speed of some of our best trains would be a small matter, this is, however, just the last straw, and engines which without difficulty run at fifty miles an hour with a fair load cannot be persuaded to go faster by any possible means. The reason is not far to seek, and an example will, I think, make it plain. An engine which draws a train at say 30 miles an hour will exert a certain horse power. Now, if the speed be increased to 60 miles an hour (and if we neglect the increased resistance at this increased speed) the horse power will have to be doubled; added to this it is certain that the resistance per ton of load increases in a rapid ratio with the speed, but that this ratio is in no case constant. Thus we see, that neglecting the increased resistance due to the speed, in increasing from 50 to 60 miles an hour 6-horse power must be exerted where 5 before sufficed. This is a fact that is often lost sight of, the increased resistance being the only factor which is taken into consideration, leading of course to error. We are accustomed to hear it said that the great speeds now being run on our railways are something quite new, and that the recent improvements in the locomotive have at last resulted in this whirlwind pace. Although this is no doubt to some extent true of the 4ft. 8½in. gauge, still large-

wheeled locomotives were made, and high speeds were obtained as far back as the year 1846, when Mr. Brunel, and Sir Daniel then Mr. Gooch, designed their type of engine the "Great Britain" for the 7ft. gauge, which made, I believe, one of, if not *the* fastest journey on record, on May 11th, 1848, running from Paddington at 9-15 p.m. express to Didcot, 53¼ miles in 47 minutes, an average speed of 68 miles an hour, the train consisting of the "Great Britain," four carriages, and a van. This instance is, I believe, verified by official record. The dimensions of this powerful locomotive were:—Cylinders, 18in. diam. by 24ins. stroke; driving-wheels, 8ft. diam.; grate area, 21 square feet; fire-box heating surface, 153 square feet; 305 tubes 2in. diam., the surface of the tubes being 1799 square feet, and the total heating surface 1952 square feet. The weight of the engine empty was 31 tons, and the weight loaded 41½ tons, it being capable of evaporating 300 cubic feet of water per hour, and was said to be capable of conveying a load of 243 tons at 40 miles per hour, and a load of 181 tons at 60 miles per hour.

Besides the large driving wheels on the Great Western, the North Midland engines, made in 1838, had 6ft. driving wheels, at that time the largest on the 4ft. 8½in. gauge, and although down to 1840 the working pressure in locomotives had seldom been increased beyond 50lbs. per square inch, only a few engines working at 60lbs., Mr. Wishaw says in his elaborate reports of his examination of the railway working of this period "that high rates of speed were maintained, occasional instances of 50 miles an hour were to be met with, and several of the Grand Junction engines, both with and without trains, were sometimes permitted to descend the Whitmore and Madely inclines at a rate, for short distances, of 68 miles per hour." Although, as we see, fast times have been made over 40 years ago, we must bear in mind that these speeds were obtained either on a straight and level track, as from Paddington to Didcot, or down hill, and the merit in running at the speed which the Scotch expresses have maintained, lies in the fact that they have much up-hill work to do.

In speaking of the race to the North, and the fast times that have been made, considering the inclines, a comparison of the work done on each road by each class of engine would have

been instructive, at the same time the comparison would not be of use without full and authentic particulars of the gradients and loads throughout the runs, which particulars, I am sorry to say, I have not been enabled to obtain in a sufficiently complete state to justify an analysis of the performances. Still some particulars of the engines employed and the speeds obtained, will, no doubt, be interesting, and as this race forms the text of the first part of my subject, I may be pardoned the recital of a few figures concerning it; although they will, probably be well-known to all here.

Taking first the West Coast route, worked by the London and North Western, as far as Carlisle, and from thence to Edinburgh by the Caledonian. The train was composed of four eight-wheeled coaches, weighing 80 tons, including passengers and luggage, and on the first part of the journey from Euston to Crewe, 158 miles, without a stop, the locomotive employed was one of the "Lady of the Lake" class, and the average speed 53·5 miles an hour. At Crewe the train was taken in hand by one of Mr. Webb's four-wheeled coupled engines, known as the "Precedent" class, this doing duty as far as Carlisle, 141½ miles, at an average running speed of 54·6 miles an hour. Considering the gradients against the train on Shap Fell, where we have 15 miles with an average of 1 in 120, 2 miles of 1 in 147, and 4½ miles of 1 in 75, this is a very fine performance indeed.

From Carlisle to Edinburgh the Caledonian engine, designed by Mr. Drummond, was the motive power, the distance 100½ miles, and the average speed 55½ miles an hour. The road being against the engine to the extent of about 15 miles altogether, of 1 in 200, 10 miles of 1 in 75, and 8 miles of 1 in 180. The total running time for the 400 miles being 442 minutes, or at an average speed of 54·3 miles an hour. Taking now the East Coast route, which is conducted on the Great Northern Railway as far as York, and forward to the Edinburgh terminus over the North Eastern. From King's Cross to York Mr. Stirling's locomotive, with single drivers, had charge of the train, the distance being 188 miles, and the average speed 57 miles an hour. At York Mr. Worsdell's engine was coupled on, and conducted the train to Edinburgh, 204½ miles, at an average

also of 57 miles an hour. The running time for the 392½ miles being thus at an average of 57 miles per hour.

In describing the locomotives that have taken part in this race, I shall commence, as in the runs, with the West Coast, taking the "Lady of the Lake" class first. And as a list of dimensions though useful for reference proves monotonous reading, I shall therefore omit many, using only those absolutely necessary for descriptive purposes; the rest will be found in my paper and on the accompanying drawings by those for whom they may have interest.

This locomotive shewn on Plate 1, Fig. 1, was designed by Mr. Ramsbottom in the year 1863, being therefore 25 years old, and it reflects great credit on the designer that this engine should have been selected to compete with the latest designed locomotives.

The engine employed was the "Waverley," which is rather more powerful than of the others of its class, having 17in. diameter cylinders with 24in. stroke, against 16in. diameter by 24in. stroke.

The cylinders are outside the frames, coupled to single driving wheels 7ft. 7½in. diameter. The heating surface in the fire-box is 85 square feet, and in the tubes 1,013 square feet; the total being 1,098 square feet; with a grate area of 15 square feet. The total weight in working order is 27 tons, being in detail as follows:—

On the Leading Wheels	.....	9 tons 8 cwt.
,, Driving ,,	.....	11 ,, 10 ,,
,, Trailing ,,	.....	6 ,, 2 ,,
	Total.....	27 ,, 0 ,,

The tender weighs 17½ tons in full working order, and is fitted with Mr. Ramsbottom's water picking up apparatus, which accounts for its light weight, and proves the advantage to be gained in long runs by the application of this ingenious invention.

A comparison between the dead-weight in the tender hauled by this engine and that on the Great Northern Railway is in-

teresting. The "Waverley," with a run of 158 miles without a stop; the weight of tender being 17½ tons.

Mr. Stirling's 8ft. driver, with a run of 105 miles, the tender carrying 2,900 gallons of water which will weigh 13 tons, and 5 tons of coal; the total weight being about 33½ tons.

This gives a gain to the "Waverley" of 16 tons; no small matter, considering that it has to be carried at a tremendous speed for 158 miles. That the Great Northern people see how they are being handicapped in this matter is proved by the fact that they contemplate adopting this apparatus on their fast trains.

To describe it in a few words. A hinged scoope is fixed under the tank bottom passing through the bottom to a height above the water level, and suitable troughs are placed between the rails in places where it is known that the water supply will be nearly exhausted.

When it is necessary to replenish the supply of water in the tender, this scoope is let down, the speed of the train forcing the water up into the tank. The minimum speed at which this operation can be performed is 22 miles an hour.

Figure 2 on Plate 1, is a sectional elevation and half plan of the Caledonian express engine, designed by Mr. Drummond, and is a fine example of the single driving wheel engine. Contrary to the usual practice, when large single drivers are employed the cylinders are between the frames, and are 18in. diam. and 26in. stroke. The driving wheels are 7ft. diameter. Bogie wheels 3ft. 6in. diameter, and trailing wheels 4ft. 6in diameter.

The working pressure is 150lbs. per square inch. The boiler having a total heating surface of 1,085 square feet, 973ft being in the tubes, and 112ft. in the box, with a grate area of 17·4 square feet.

The weights on the rails when the engine is in full working order are:—

On the Bogie	13·5 tons.
,, Drivers	17·0 ,,
,, Trailers.....	11·4 ,,
Total.....	41·9 tons.

It has a six-wheeled tender, with wheels 4ft. diameter, and 13ft. wheel base, which carries 2,850 gallons of water, and weighs when loaded 33½ tons.

The slide valves of this engine are divided, one-half of the exhaust steam passes round the cylinder barrel, joining the rest above, and thus forming a partial steam jacket. It will be seen that although the frames have been cut away at the sides to allow the cylinders to be got between, the exhaust cavity in the slide valve is much contracted, and although special provision has been made for getting the exhaust steam away in the manner before described, without a sufficient area through the valve itself, the exhaust must be throttled, and the result will be increased back pressure in the cylinder.

A special feature is the use of Mr. Adams' Vortex exhaust pipe, in which the exhaust steam escapes through an annular space, the centre of the pipe being expanded below to a wide opening which faces the lower tubes. The object is to increase the draught through the bottom rows of tubes which, as the gasses in the fire box rise to the highest possible point, are usually less efficient than the top rows, and are liable to obstruction through soot and ashes. The result has been, I believe, an increase of evaporative efficiency in the boilers to which this exhaust-pipe has been applied with a corresponding reduction in the coal consumption.

The sanding arrangement is a great improvement on the old method, the sand being blown directly under the tread of the driving wheels by a jet of compressed air. As the engine is fitted with a Westinghouse brake its pump provides the requisite air, the whole forming a neat and thoroughly scientific sanding apparatus, and when compared with the clumsy plan of dropping large quantities of sand on to the rail in front of the wheel, much of which must be wasted, added to the fact that the engine must move some distance, short though it is, before it gets on to the sand the advantages are obvious and need no comment. The consumption of sand with the new arrangement is, I believe, only about 1lb. per mile.

When no compressed air is available for blowing the sand under the wheels, a steam pipe from the boiler answers the

same purpose, this being Messrs. Gresham and Holt's patent, and is now being very generally adopted on English railways.

While speaking of sanding for increasing the adhesion, I may mention that on the Belgian State Railways a jet of hot water from the boiler has been used with success. The advantages claimed for this over sanding are that the rails and tyres are not worn, and the resistance of the train is not increased as when sand is used.

Some other particulars of this engine which may be of interest are: the eccentrics are kept in place on the crank axle by lips fitting on to the crank webs, instead of by cutting keyways in the axle.

The expansion link is suspended from the centre of its length which gives much the best distribution of steam (with very little slip of the block) for the Stephenson's link when properly worked out. The fire-grate is slightly inclined, this not only gives a ready access to the hind mud plugs, but also causes the fuel, if put in under the fire door, to shake itself slowly down to the tube plate end of the box whilst it is being consumed; the effect of this is that the hottest part of the fire is at the tube plate end, and catches the unconsumed particles of carbon from the "green fire" at the back which would otherwise escape in the form of black smoke. A self-stoking fire is thus to some extent obtained, and a more perfect combustion is the result. The fire-box top is stayed on the Belphaire system, and suitable arrangement is made for allowing the copper box to expand, which is very necessary.

Longitudinal stays, having expansion joints, are provided between the smoke box and fire-box tube plates; this is somewhat uncommon, as they take up room where tubes are the most efficient.

The safety valve is of the Ramsbottom type, and is placed on the dome top. This does not seem to me the best possible position, the regulator pipe being immediately below, which will cause a current to be formed in the steam at this point, while the object should be to get the steam as still as possible in the neighbourhood of the valves.

The locomotive shewn on Plate 2, Fig. 3, is perhaps one of the most celebrated in the world, and this it is that takes the

East coast express on the first part of its journey. It is the design of Mr. P. Stirling of the Great Northern Railway, being one of the most recent developments of the single driving wheel express engine.

The cylinders are outside and are 18 inches diameter by 28 inches stroke, which, with an 8ft. driving wheel (taking the tyre as half worn), gives a tractive effort of 94⅓lbs. per lb. of cylinder pressure.

The front end of the engine is carried on a bogie having four wheels 3ft. 11in. diameter, and the trailing wheels are 4ft. 7½in. diameter.

It will be noticed that the bogie centre pivot is not placed midway between the axles, it being 3ft. 6in. behind the leading and only 3ft. in front of the trailing bogie axle. The effect of this is to unequally distribute the weight on the wheels, and it is claimed for this arrangement, that the leading wheels, being more in advance of the engine than if pivotted centrally, take the curves with greater freedom, and also that the hind wheels have less side movement towards the outer rail, thus the guiding of the engine is eased.

The distribution of the weight on the rails is:—

On the Leading Bogie Wheels	17 tons 11 cwt.	8 tons 2 cwt.
,, Hind ,, ,,		9 ,, 9 ,,
,, Driving Wheels		17 ,, 0 ,,
,, Trailing ,, ...		10 ,, 12 ,,
Total		45 ,, 3 ,,

Mr. Stirling himself says in speaking of the weights on the rails of this locomotive "that the bogie carries a comparatively light weight on each wheel, but sufficient to solidify the road before the driving wheels come on to the rails, and thereby put them in the best position to carry the weight on the large wheels, while the load on the trailers holds down the rails behind." Thus a long and comparatively steady bed is made for the engine.

He adds that the engine has plenty of adhesion for the size and power of the cylinders, and does not slip more than coupled engines.

The boiler is 4ft. diameter, its heating surface being, in the fire box 109 square feet, and in the tubes 936 square feet, making a total of 1,045 square feet. The grate area 17¾ square feet, and the boiler pressure 140lbs. per square inch. The diameter of the boiler seems small for this size of engine, but is a necessity owing to the driving wheels being higher than the boiler centre line above the rails. As it is, the clothing has had to be cut away behind the driving splashers. Mr. Stirling does not employ a dome on his boiler, using instead the Hawthorn collecting pipe. The absence of the dome certainly adds to the appearance of the engine and also to the strength of the boiler. Still it seems to me that with outside cylinders, which require the dryest of steam, a dome would be of advantage, and, I believe, that the cylinders of these engines require very careful watching, or the consequence would be the forcible removal of a cylinder cover. Another objection to the absence of a dome is, that the dome serves as a very efficient manhole, through which the state of the stays may be periodically inspected.

The tender has six wheels, 4ft. 1½in. diameter, carrying 2,900 gallons of water and 5 tons of coal, weighing when full 33¼ tons. The water supply being sufficient for a run of 105 miles without a stop.

The engines of a similar type which preceded this, having however more heating surface, travel between King's Cross and Leeds, the gradient out of Leeds being 1 in 50, and leaving King's Cross 1 in 105. It is said that trains of from 16 to 20 carriages are taken with ease, and that the engine is capable of moving a gross weight of engine, tender, and train, of 356 tons on a level at a speed of 45 miles an hour. The steam pressure being 140lbs. and with trains averaging 16 coaches of from 10 to 12 tons each, the consumption of coal has been 27lbs. per mile.

This locomotive is a splendid specimen of the modern English racer, its symmetry having always won the admiration of engineers, and it is on these lines that the express of the future will, I believe, be designed.

The three preceding engines illustrate very well what has been done with the single driving wheel, and as I shall describe a four wheeled coupled engine having the hind wheels coupled when dealing with the compounds, I do not purpose saying

anything concerning the "Precedent." I have introduced instead Mr. Stroudley's "Gladstone" type which has the four leading wheels coupled, this being a departure in express practice. It will be found on Plate 2, Fig. 4.

The leading particulars of this locomotive are: inside cylinders 18¼in. diameter by 26in. stroke, coupled wheels 6ft. 6in. diameter, the trailing wheels being 4ft. 6in. diameter.

The heating surface is, in the tubes 1,372·92 square feet, and in the box 112·48 square feet. The total being 1,485·4 square feet, and the grate area 20·65 square feet.

The weight on the rails, when the engine is in working order is:—

On the Leading Wheels.....	13 tons	16 cwt.
,, Driving ,, ...	14 ,,	10 ,,
,, Trailing ,, ...	10 ,,	8 ,,
Total.....	38 ,,	14 ,,

The tender has six wheels 4ft. 6in. diameter; its weight with 2,250 gallons of water and 2 tons of coal being 27½ tons.

This powerful locomotive was designed by Mr. Stroudley to work express on the heavy road from London to Brighton. The inclines are severe, most of the run being up 1 in 264. It takes 25 vehicles, weighing with the engine and tender 350 tons, from London to Brighton, 50 miles, the running time being 70 minutes. Leaving London, 2½ miles have to be surmounted of 1 in 100, then 8 miles of 1 in 264, and altogether about 16 miles of 1 in 264 have to be dealt with in the run.

To take a load of 350 tons on such a road 50 miles in 70 minutes is a fine performance.

The coupling of the leading wheels is uncommon in an express engine, a large wheel seldom being used to take the road. I believe, however, that no difficulty has been experienced from this, the engine having attained a speed of 67 miles an hour.

One object in coupling the leading wheels was that a long boiler might be used without having recourse to a bogie. Mr. Stroudley being one of the two locomotive superintendents in England who have not adopted it, his contention being that the

bogie entails extra expense without corresponding advantages. With the long boiler large tube surface is obtained.

Another reason for coupling the front wheels was, that with this arrangement a larger grate could be got in than with hind coupled wheels, without getting the rigid wheel base longer than convenient, the small trailing wheel lending itself to an extension of the grate. Some particulars of interest are :—

The cylinders are cast together, and as 17½ inches is about the largest diameter of cylinder that can be got between the frames on the 4ft. 8½in. gauge, with the valves between them, without unduly contracting the exhaust passages, the valves have been placed underneath, being in this position they also serve to drain the cylinders, no drain-cocks being used. This arrangement has the advantage that when the engine is running without steam the valves fall from their faces, this reducing the wear considerably. This device is not however new, as the valves of the locomotive "Sphynx," built by Messrs. Sharp, Stewart, & Co., for the M. S. & L. Railway, in 1849, were arranged in a similar manner.

Another point to notice is that the coupling rod crank pin is on the same side of the wheel boss as the inside crank, the usual plan being to place them on opposite sides, which is done to make the coupling rods balance to some extent the inside revolving and reciprocating weights. Mr. Stroudley, however, contends that when the coupling rod crank pin is on the same side as the inside crank, the strain on the crank axle bearings is only that due to the difference between the resistance offered by the coupling rods, and the impelling force of the steam, instead of being the sum of these forces as when placed opposite. And it is said that the saving in the wear of the crank axle brasses, when arranged in this manner is remarkable.

It will be seen by reference to the drawing, that the boiler tubes are bent upwards to a camber, instead of being straight, the versed side of the curve being equal to the diameter of the tube, viz., 1½ inches; this has been done to prevent the tubes leaking at the tube plates through the expansion and contraction, as it is evident that when bent in this manner the tubes are better able to "give" when required.

The water before being fed into the boiler is heated by the exhaust steam passing through an apparatus on the tender. The tubes being closely packed together in the boiler it is very desirable that the water should be as pure as possible. Now, when water is heated it precipitates lime salts, which if allowed to enter the boiler would soon impede the circulation, and in consequence its evaporative efficiency.

It is claimed for this locomotive that only 2·02lbs. of fuel are consumed per indicated horse power per hour, though I have some doubts as to the accuracy of the experiments from which this result has been deduced. If they are reliable, this is the most economical locomotive in the world.

The latest departure in locomotive practice has been the introduction of compounding. This, strange to say, has in most instances been applied to the Express locomotive, which even when constructed in the ordinary manner always works with a high degree of expansion, owing to the difficulty experienced in getting the exhaust steam away at the great piston speed usually maintained.

The heavy goods locomotive for mineral traffic, to my mind, offers the better field for improvement by the use of expansive working, as these engines with a much lower piston speed, and with the great loads that they are required to haul, are mostly cutting off at from half to three-fourths the stroke. Mr. Worsdell has compounded his goods engines, which is a step in the right direction.

It is thought by many that the locomotive engine, at any rate, when in its ordinary high pressure state, is a very wasteful piece of mechanism, and that the power developed is a very small fraction indeed of the theoretical equivalent in the fuel consumed.

M. Marie, of the Paris and Lyons Railway, has made some valuable and interesting experiments on the consumption of fuel and water in the locomotive boiler, which throw some light on this question.

He found that the consumption of fuel in passenger engines averaged 3·27lbs. per effective horse power per hour, and that it was 2·88lbs. per indicated horse power per hour, also that 8·88lbs. of water were evaporated per lb. of fuel.

M. Regray, of the Great Eastern Railway of France, who made independent experiments, conducted in a very different manner, corroborates M. Marie's results, finding that the averages of goods and passenger engines were 3·01lbs. per indicated horse power per hour, and that the minimum was obtained on the express engine, and was 2·48lbs. per indicated horse power per hour.

M. Marie calculated from his experiments that the efficiency of the boiler alone was 65 per cent., which gives a loss of 35 per cent. from a theoretically perfect boiler, and that the efficiency of the engine alone was 54 per cent., the loss being 45 per cent., and the efficiency of the engine and boiler combined was 35 per cent. These results were obtained with a very large heating surface, about 96 times the grate area, and also with very large cylinders.

He, as well as M. Regray, found that the consumption was lower in express than in slow running engines. This he attributes to the great piston speeds maintained, and contends that a high piston speed is favourable to economy in fuel, as it diminishes the leakage of steam past the piston, and the condensation during admission.

He also made some exhaustive experiments with a Corliss engine, and a comparison of the results is instructive. In the Corliss engine the boiler efficiency was found to be 64 per cent., and the engine efficiency 53 per cent. In the locomotive, as before stated, boiler efficiency 65 per cent. and engine ditto 54 per cent.

That is to say, that the efficiency of the locomotive compared with a theoretically perfect locomotive, is as good as a Corliss condensing engine compared with a theoretically perfect engine working as a Corliss engine.

Of course the loss is enormous when compared with the total power stored in the fuel. Yet to prove that in our way we are as economical as the famed Corliss engine is something. Still any economy, however gained, whether by compounding or otherwise, should at once be taken advantage of.

All the experiments that have been made shew that there is a gain in the efficiency of the locomotive by compounding, over other locomotives that have been doing the same work, but whether there is any gain in the end, where fuel is cheap, over

the best possible design of the ordinary locomotive for that work, when we take into consideration the increased first cost, and the extra expense for maintenance, is open to doubt. Still the compound locomotive is yet in its infancy, and its possibilities are great.

A strange fact in connection with compounding is that locomotives having cylinders without steam jackets have proved more economical than those on which they have been provided. This is no doubt caused through the inefficient manner in which steam jackets are usually drained, causing them to act as condensers, many engineers thinking that if they only surround their cylinders with high pressure steam, they have done all that is needful. This, however, without automatic draining apparatus often proves a source of loss instead of gain.

I now purpose giving a short description of the compound locomotives which usually run the trains pitted against each other, and although it is a significant fact that both compounds were taken off during the race and the fastest times obtained by the ordinary engines; still the compounds being the most novel, will be more interesting.

So much has been written concerning Mr. Webb's three-cylinder compound locomotive, that although any list of modern express types would be incomplete without some reference to it, still a short description must suffice. An elevation and half plan will be found on Plate 3, Fig. 5.

The principle of this compound briefly stated is, that two high-pressure cylinders actuating cranks at right angles exhaust into pipes of ample capacity forming a receiver, which feeds a totally independent single cylinder low-pressure engine, fitted with relief valves so that a certain pressure cannot be exceeded in that cylinder.

In the "Dreadnought" class the high and low pressure cylinders are respectively 14in. and 30in. in diameter, the stroke being in both cases 24 inches. The ratio of the two high-pressure cylinders together, to that of the single low-pressure cylinder being 1 to 2·3. The high-pressure cylinders are outside the main frames driving the trailing wheels, and the low-pressure cylinder is inside and gives motion to the centre wheels, both wheels being 6ft. 3in. diameter.

The leaders are fitted with Mr. Webb's patent radial axle-box having 1¼ inches side play either way from the central position, and are 3ft. 9in. diameter. The distance between the high and low pressure driving wheels is 9ft. 8in., this being the rigid wheel base of the engine.

The arrangement of framing is novel, there being the usual inside main frames, and also short supplementary frames inside these, extending from the low pressure cylinder to the stay in front of the fire-box.

The heating surface in the tubes is 1,242·4 square feet, and in the fire-box 159·1 square feet, making a total of 1,401·5 square feet, with a grate area of 20¼ square feet. The working pressure is 175lbs. per square inch, which is the highest used in any locomotive boiler that I am aware of.

The weight of this engine in working order is 42½ tons distributed as follows :—

On the Leading Wheels.....	12	tons	10	cwt.
,, Low-pressure Driving Wheels	15	,,	0	,,
,, High ,, ,, ,,	15	,,	0	,,
Total.....	42	,,	10	,,

This being a most excellent distribution. A distinguishing feature of the boiler is the abolition of the usual bottom ring of the fire-box. The fire-box itself is continued downwards, and fitted with a water bottom below the fire-bars, which serves as an ashpan. This is done to afford a freer circulation for the water than in the ordinary construction, and also allows dirt to be deposited below the level of the fire.

Another point of note is that at the fire-hole the plates of the inner and outer fire-box are brought together and riveted without the intervention of the ordinary fire door ring, which very often gives trouble owing to the unequal expansion of the iron and copper, and the great length of the rivets sometimes employed.

Locomotives designed according to the compound systems, associated with the names of M. Mallett, in France ; Von Borries, in Germany ; and Mr. Worsdell, in England, have one high and

one low pressure cylinder. The exhaust steam from the high pressure passing through pipes or other suitable forms of receiver into the low-pressure cylinder, in which it is further expanded. The difference in the systems being in the valves used, when necessary for starting, as when the high pressure crank stops on its dead centre, or where the engine in its normal or compound state, is not sufficiently powerful to make the start. In these cases high pressure steam suitably and automatically reduced (to equalise the loads on the pistons) is admitted into the low pressure cylinder, and is immediately, and also automatically cut off, when the engine has made a few strokes.

In Mr. Worsdell's latest compound passenger locomotive, shown on Plate 3, Fig. 6, the high and low pressure cylinders are between the frames, and cast in one piece, being 18 and 26ins. in diameter, with a stroke in both cases of 24ins. The four hind wheels are coupled, and are 6ft. 8¼in. diameter, the leading wheels being 4ft. 7¼in. diameter. The boiler contains 242 brass tubes, 1¾in. outside diameter, their heating surface being, 1,211·3 square feet, and in the fire box 112 square feet, total, 1,323·3 square feet, with a grate area 17·33 square feet. The working pressure is 170lbs. per square inch, and the weight of the engine when in working order is:—

On the Leading Wheels	.....	12 tons	18 cwt.	0 qrs.
,, Driving ,,	.....	17 ,,	19 ,,	0 ,,
,, Trailing ,,	.....	12 ,,	9 ,,	3 ,,
Total	.....	43 ,,	6 ,,	3 ,,

Joy's motion is used for actuating the valves and is of the ordinary type.

The height of the centre line of the boiler above the rails is 7ft. 8in. and is the highest boiler level used on any English passenger locomotive. It will be seen that the crank webs are circular, which is a departure, the object being, I suppose, to get as much sectional area as possible where crank axles generally fail, viz.: at the point where the crank pin joins the web.

Another advantage is that the axle can be machined altogethe in the lathe.

With these, the latest and most powerful locomotives of thei respective classes in the world, which in this race have no doub been doing their utmost, the fact remains that we have not a locomotive that can, or at least does, make a trip of say 100 mile on our average roads, timed to travel at a rate of 60 miles ir 60 minutes.

In inquiring into the reason, some remarks on the condition that limit speed on railways may not be out of place.

Given a perfectly straight and level track, in good order, the question which at once presents itself is, what is the maximum speed at which a locomotive and train may run with safety? It being assumed that sufficient power is available, and that the road is strong enough to bear the weight required for adhesion.

The internal disturbing forces, which tend to unsteadiness of running, can only be partially balanced, as we may only truly balance the revolving parts, and they but for one speed, with the usual weights placed inside the rim of the wheels.—The better plan for the revolving parts being to place the weight at about the same distance from the axis of revolution, as the parts to be balanced.—The horizontal reciprocating parts cannot be accurately accounted for, except by using equal and opposite reciprocating parts, which is of course never done on account of the cost and the friction which would be entailed. Instead, weights are placed in the wheel to compensate to some extent for these disturbing forces. In this manner we introduce an equivalent vertical unbalanced force, in as much as we balance the horizontal force, which tends to set up the hammering action on the rail, noticeable in engines on which the balance weights have been calculated, taking too much of the horizontal forces into account.

Still with a properly designed locomotive, that the limit o speed is far beyond anything that we have at present attained has been I think clearly demonstrated.

Curves in any degree sharp at once reduce this limit very materially, but inclines, as on the level, are merely a question

of sufficient power. It being taken as granted that with locomotives powerful enough, and the road sufficiently strong, the limit of speed might be greatly extended, let us take into consideration the points that limit us on the 4ft. 8½in. gauge.

The first and most important element in the problem is the boiler, as however powerful we might make the engine this of itself would be useless, without efficient means for generating a sufficient quantity of steam to supply its greatest needs.

Now the largest boiler used on any 4ft. 8½in. guage English locomotive is that on the "Gladstone" class, which has a total heating surface of 1,485 square feet, and 20½ square feet of grate area. The "Gladstone" has indicated, for a short distance, 1,089 horse power, at a speed of 58 miles an hour, so that I think we may estimate that with our present type of locomotive, the maximum boiler power obtainable will be 1,100 indicated horse, and this will be the measure of our engine power.

The resistance per ton of train is such a variable quantity, depending as it does on so many factors, such as the condition of the road, the wheel tyres, the journals and their method of lubrication. Then the wind, the form of coaches, and the bulk of the train, each of these modifying to some extent the resistance.

Forty pounds per ton of train has generally been taken as the resistance to be overcome on a level at a speed of 60 miles an hour. This, however, with efficient oil lubrication and rolling stock fitted with bogies, according to the experiments conducted by Mr. Stroudley, is in excess of the true amount. The "Gladstone" has taken a gross load of 145 tons at 65 miles an hour down a gradient of 1 in 264. The boiler pressure being 125lbs. per square inch, with cylinders 18¼in. diameter and 26in. stroke, and driving wheels 6ft. 6in. diameter. The steam cut off at 50 °/₀ of the stroke, and an average pressure maintained in the cylinders of 40·7lbs. taken from the indicator diagram.

The tractive power of the engine would be $\frac{18\frac{1}{4}^2 \times 26}{78} = 111$ per lb. of effective pressure in the cylinders, and the average pressure being 40·7. The tractive force thus would be 111 × 40·7 = 4,517lbs.

The load being 145 tons $\frac{4517}{145}$ = 31¼lbs., the resistance per ton. But this was down an incline of 1 in 264, which would reduce the resistance by $\frac{2240}{264}$ = about 8¾lbs. per ton, adding these results together we get 40lbs. resistance per ton at 65 miles an hour.

The diagram selected, is not by any means the most favourable specimen, others giving better results; still it goes to prove that a resistance of 40lbs. per ton at 60 miles an hour is in excess of the true amount.

To take a train, so that it may be timed to run at 60 miles an hour, the speed must at some part of the journey greatly exceed a mile a minute, as there is the time taken up in getting up the speed and also the time required to stop, taking for an estimate five miles as being taken up by these two operations. Thus five miles is run at half speed which virtually increases our journey to 65 miles, and this is the rate per hour at which we must run, while the average speed maintained between the operations of starting and stopping must be 66 miles an hour.

Taking the engine as weighing 45 tons, the tender 25 tons (the weight of the tender may be made less than this by the application of Ramsbottom's picking-up apparatus), and the train at least 80 tons, the total weight would be 150 tons, and the tractive force required at 66 miles an hour would be 150 × 40 = 6,000lbs. on a level.

But the train will have to be taken up gradients. Now taking the steepest of these as being 1 in 250, and as all the grades on any line can be resolved into two—one up to the highest point of the line and the other down—1 in 500 will not be far from an average, and may be provided for. One in five hundred will increase the resistance by about 4½lbs., so that 150 × 4½ = 6,675lbs. and this will be the tractive power required to mount the average grade.

The horse-power required would be 5,808ft. per minute at 66 miles an hour × 6,675lbs. tractive power, divided by 33,000 = 1,175 indicated horse-power, and our boiler must be capable of supplying a sufficiency of steam for this. Now according to M. Marie's experiments, a well-designed locomotive should burn

2·88lbs. of coal per indicated horse-power per hour, so that we have 1,175 × 2·88 = 3,384lbs. of fuel to be burnt on the grate in an hour; or taking the most favourable case according to M. Regray with 2·4lbs., we get 2,820lbs. to be burnt. Taking a mean of these we get 3,102lbs., and even if we were to burn the tremendous quantity of 100lbs. per square foot of grate per hour (the usual quantity burnt on express engines being about 75lbs. per square foot), we should require 31 square feet of grate area, which is almost out of the question on the 4ft. 8½in. gauge.

To burn this quantity per square foot would require a stronger blast than we can get at these high speeds, as we have not only to get the steam into the cylinder but out again, and this is no small difficulty when the cylinder has to be emptied about 400 times a minute. Expansive working must therefore be carried to a great extent, giving a weak exhaust. This point was very well illustrated during one of the fast trips made by the "Waverley," when the blower had to be kept going continuously during the run.

It may be objected that the resistance I have taken is still too great. But there is no doubt that some parts of the journey the speed will have to reach fully 70 miles an hour, which I think will be met by my estimate.

We at once see the advantage of a wide gauge if high speeds are to be obtained, as there would be no difficulty in regard to the grate on the 7ft. gauge, this going to prove that Mr. Brunel was right when he maintained that 100 miles an hour would never be obtained until his gauge was adopted.

Some may say, this is all very well, but locomotives are to-day travelling at a rate of over 66 miles an hour, which is true enough; we are now, however, considering the case of a locomotive which will not only attain that speed on good pieces of road and down inclines, but keep it up on a road against it to an average extent of 1 in 500, this making all the difference.

The adoption of the Wooten fire-box with its large grate area and slow combustion would be a way out of the difficulty, but it would be necessary to raise the height of the centre line of the boiler from the rail, above anything that we are accustomed to at present in English engines.

This dimension, however, keeps steadily increasing, and Mr. Worsdell in his compound engine has gone to 7ft. 8in. or 1·6 times the gauge, and I believe that Mr. Wooten, in one of his latest engines, has reached what seems the limit in 8ft. 2in.

That a high centre of gravity, contrary to what was at one time thought, promotes ease in running and is consequently less destructive to the permanent way has been proved beyond dispute, and that when a locomotive with a high centre of gravity takes a curve at speed, the weight is thrown almost entirely on to the wheels on the outer rail, this tends to keep the leading wheel flange hard against it; the load preventing the wheel from climbing. A reference to the diagrams on Plate 5, figs. 9 and 10, will, I think, make this clear. These diagrams though not original, may be new to many.

Let us suppose that in the diagrams we have end views of two locomotives, one with a low and one with a high centre of gravity.

I may preface my remarks by saying that there is not an instance on record of an engine upsetting while the permanent way remained able to carry an engine at all. So that we may dismiss the fear of any accident of this kind happening, at least while the centre of gravity is kept to anything in reason. The direction of the overturning force is shown by the arrows, and is of course nearer the rail in fig. 10 than in fig. 9. A A are the overturning moments, while C C represent the bursting effort on the rail. The inclined line B B shows the direction into which this bursting strain will be resolved, it being evident that the force which tends to widen the gauge is much greater in fig. 10 than in fig. 9.

Now we have further to consider that the engine is not rigid, being supported on springs, and the higher the centre of gravity the greater may be the load put on the outer spring, as shown by the line B in fig. 9, and the less in proportion will be the bursting strain on the rail.

With the high centre of gravity the engine will swing more than the low engine, but will ride easier, and the elasticity of the springs being brought more into play, the road is spared rough side shocks, and the wheels and axles are not so violently tested. Of course the springs have more work to do, and will require designing accordingly, and we must not forget that with

the high centre of gravity when going round a curve, the load on the inside rail is greatly diminished, and may under certain conditions entirely disappear, although this lightening has advantages which have been pointed out by Mr. Stroudley, inasmuch that it allows the inside wheels to slip. Still there may be nothing to keep the wheel to the rail but its own weight, and as the front end of the engine is liable at any time to be jerked to the inside, the engine may leave the rails. This is likely to happen if the super-elevation of the outer rail is too great.

For easing locomotives when going round curves, a jet of water is now very often employed, which acts as a lubricant, and augments to a great degree the efficiency of any locomotive which has many sharp curves to contend with; engines fitted with this appliance taking with ease loads round curves which they would not otherwise "look at."

Mr. Riches, of the Taff Vale Railway, has invented an ingenious arrangement for effecting this purpose automatically. It consists of a small tank fixed under the footplate at the leading end of the engine, to which water is supplied from the tender and kept at a certain height in the tank by means of a ball valve. At either side of the tank projecting some distance above the water level, are two tubes, having connected to them pipes leading to the flanges of the leading wheels.

When the engine takes a curve, the centrifugal force washes the water to one side of the tank, and the level of the water being raised at that side higher than the stand pipe, it flows down to the rail, lubricating the wheel as required.

Anything which tends to make perfect the locomotive deserves our earnest consideration, if it be but in its minor details, whether for the attainment of higher speeds or efficiency of working, so that this annihilator of space may in time become the perfection of human invention and ingenuity.

The most useful improvement of recent date is, to my mind, the sanding apparatus before described, which will tend to reduce the weight required for adhesion, and as the maximum adhesion is only required when starting or for an uphill piece of road, the weight for this purpose may be materially reduced, resulting in a less first cost for the engines, less wear for the permanent way, and greater hauling power.

Turning now to narrow gauge locomotives I find that any remarks on this part of my subject must be of the briefest possible character, so that my paper may be kept within due limits. But the fact that the manufacture of locomotives in Great Britain employs so much capital and labour, and also that most of our railway companies make their own rolling stock, proves that a great part of our trade in this article is derived from our Colonies, or from those countries who require mostly engines suitable for narrow gauges.

In designing locomotives for the narrow gauges which have been generally adopted in our Colonies, and in most countries now being rapidly opened out to trade by railway communication, the conditions under which the locomotive has to exist must be taken into consideration. These conditions are in many cases so different from those on our own railways, that engineers who supply any of our ordinary English types without many, and in some cases radical alterations, make a grave error, which error will no doubt be most unpleasantly discovered when other orders from the same customer are to be placed.

In these cases the practice which has found favour with American engineers is not by any means to be ignored, as they have for years been working under the very conditions that prevail in most of those countries, into whose markets locomotive manufacturers *must* have entrance.

Badly laid roads with very light rails, steep inclines and sharp curves, the curves being sometimes less than 100 feet radius, and some lines in fact having hardly a straight piece in their whole length; this is the problem to which a locomotive constructor has most seriously to apply himself.

One line might be mentioned from La Guira to Caracas, in Venezuela, having a length of 23 miles, the distance being as the crow flies only 5½ miles from place to place. The total rise in the first 21 miles being 3,135 feet, with a steady grade of 1 in 27. The sinuous character of the line is another feature, curves of 130ft. radius being frequent. The engines working the traffic on this railway are shewn on Plate 4, Fig. 7, and will be described hereafter.

The gauges generally adopted, and known as the narrow gauges, are the 3ft. 6in., the metre, or 3ft. 3⅜in., and in some

ases the 3ft. 0in. With these gauges and in consequence a dis-
ance between the engine frames of at most 3ft. 0¼in., 2ft. 11⅝in.,
nd 2ft. 6¼in. respectively, (if inside frames are to be used) out-
ide cylinders must be applied. This point being at once
isposed of.

Again, the ordinary English style of valve motion, with steam
hests between the frames, and Stephenson's or other link motion,
hough having a directness recommending it to most English
inds, is not available. For this reason, that however much
ou may contract the steam chest and throttle the exhaust, there
ill is not sufficient room for a workman to get at the valves for
ispection, easily and expeditiously, which is indispensable. It
eing, I take it, an axiom with all who have to do in any way
ith locomotives, that expenses for repairs are to be kept at a
inimum. This leads to steam chests outside the frames and
bove the cylinders.

Then we have the choice of say, three kinds of valve motion.
he Stephenson's link, with a rocking shaft, as adopted
lmost universally by American engineers; the Joy's motion,
r the Walschäert's gear.

Taking the Stephenson's first.—There is no doubt that this
rrangement, when properly proportioned, gives a good distri-
ution of steam, but it has several disadvantages. In the first
lace, the rocking shaft, inviting, as it were, a sinuous movement,
econdly the difficulty experienced in getting to oil the eccentrics,
vhen, as is very often the case, a tank engine, carrying a large
uantity of water is in question. Side tanks being used, as
addle tanks throw the centre of gravity of the engine perilously
igh on these narrow gauges. Then the one-sided manner that
he expansion link is hung, causes binding on the motion pins,
nd this one-sided hanging cannot be obviated, without adding
n extra valve rod, and in most cases shortening the eccentric
rods, which are complications not to be desired.

The Joy's motion suggests itself as a way out of some of these
difficulties, it being all outside the frame, and well within reach
for oiling and inspection. The great drawback to the use of this
motion is, to my mind, the unmechanical sliding action which
takes place between the reversing quadrant and block, and when
used in a sandy country, such as many parts of South America,

although an almost mathematically correct motion when new and in good order, the amount of play, that very quickly ensues between the quadrant and the block, destroys to a wonderful extent its beauty and precision of motion. Another point is the attachment to the connecting rod, which sets up cross strains in this most vital element of the machine, although I do not lay much stress on it, as this can be made of ample strength.

The valve motion generally known in England as the Walschäert's gear, which was invented however by Von Waldegg, and only introduced into Belgium by M. Walschäert, though extensively used on the Continental railways, has until lately been little known in England. And as it may be somewhat new to many of our members, perhaps a short description may not be out of place.

By reference to Plate 4, Fig. 8, it will be seen that there is but one eccentric (or in this case a return crank) employed, marked A on the sketch, which if the line of motion of the eccentric rod coincides with that of the engine, is placed 90° either in front of or behind the crank pin, its position before or after depending on the position of the reversing shaft in relation to the expansion link. The return crank A communicates through the eccentric rod motion to the end of the expansion link B, which swings in fixed centres.

A pendulous lever D is connected to, and receives its motion from, the crosshead, and to this lever the valve rod C is connected at such a point below the valve spindle pin E, that the distance F is equal to the lap and lead of the slide valve when the piston is at the end of its stroke. This gives the requisite lead to the valve, the return crank being in the position that would be occupied by an eccentric for a valve without lap or lead.

The slide valve thus obtains its motion by a combination of these two movements, and by simply sliding the valve rod C form one end of the expansion link B to the other, a reversal of the motion is effected, and any degree of expansion can be obtained by the intermediate positions.

It will be seen that whenever the crank is on either of its dead centres the expansion link B is at right angles to the line of motion, and as it is struck to a radius, the length of the valve rod C, in consequence, the valve rod can be moved into

any position on the expansion link without moving the valve, this of course giving a constant lead.

This motion looks more complicated on a diagram than it really is, and when well proportioned gives excellent results, whilst the slip of the expansion block in the link is almost nil.

The return crank and the number of joints seem to be against its efficiency, but very favourable accounts have been received of its working in countries where grit as hard as flint had always played sad havoc with valve motions, and taking all things into consideration I think that this is the motion to be recommended for the narrow gauge. Another advantage it has is that it lends itself readily to being boxed up, which is now often done to keep this grit from the vitals of the engine.

On Plate 4, Fig. 7, will be seen a tank locomotive for the 3ft. gauge, and is of the type which works the traffic on the La Guira and Caracas Railway before mentioned.

These engines were built some years ago by Messrs. Nasmyth, Wilson, and Co., of Patricroft.

They have cylinders 14½in. diameter and 20in. stroke, and six coupled wheels 3ft. in diameter. The driving tyres are without flanges to allow greater freedom in passing round the many sharp curves. And owing to the sinuous nature of this line the engine has been designed to run with the awning end first, so that the driver may have a better view of the road.

The heating surface and other leading dimensions will be found on the drawing, and also the weights on the rails, so that I need not further refer to them.

This engine takes a load of 80 tons up the ruling gradient of 1 in 27, for a distance of 21 miles at a speed of 10 miles an hour.

It will be seen that the distance between the frames has been increased at the fire-box end, so that a respectable width of grate might be obtained, and as the engine does not haul its load through this part of the frame, this is quite admissible.

Again, the drawgear is arranged so that the pull of the train is taken from a point as near the rigid wheel base as possible to ease the engine on the curves.

I fear that my paper is exceeding the recognised dimensions allowed on these occasions, but before concluding I should like to refer to one or two details of construction.

As it is now becoming the practice to use balanced or more correctly speaking, partially balanced slide valves on locomotives, one style will be found illustrated on Plate 5, Fig. 11.

This valve is the invention of a Mr. Richardson, and is of American origin, being extensively used in the United States, and is said to give satisfactory results.

Four grooves are planed in the back of the valve, and four rectangular section strips A A are placed in these grooves and are kept against a relief plate by light springs B shewn below. The distance between the strips A A being greater than the travel of the valve, each strip wears its own path on the relief plate, and never crosses the ridges made by its fellow, this consequently tends to keep the valve tight.

It will be noticed that the joints between the strips at C C C C at the corners of the rectangle freed from pressure, are in a line with the travel of the valve, thence are always in contact with the ridges caused by this joint, and by this means are kept tight, the steam pressure binding the whole together, and any slight leakage is conveyed to the exhaust by the hole D.

The sketch shews the balancing applied to a Trick or Allen valve, its double ports giving a sharp admission and cut off which are great advantages, but it is apt to wear quickly as its bearing surface on the valve face is diminished.

Another arrangement for balancing the valve on the same principle is shewn in Fig. 12, having instead of the balanced rectangle a balanced circular piece, which is fitted with rings to make a steam tight joint.

A new tyre fastening is shewn on Plate 5, Fig. 13, and is Messrs. Carlton and Stroudley's patent.

The tyre is turned with the groove marked F, and rings of the sections G and H are dropped in, each having a piece ¼in. wide cut out of its circumference to allow of their being sprung into place, when separate small pieces are inserted to make the rings complete. The tyre is afterwards hammered over the taper section ring, and the whole forms a tight arrangement without the use of the usual set screws. Though whether this will be successful, where other fastenings of this kind have failed, that is when the tyre has rolled itself larger in diameter through its contact with the rails, is a moot point.

I should like to have gone into the question of fixing the position of the centre of gravity in the locomotive horizontally, as this is a most vital question, but that my paper has grown to an inordinate length as it is, and this of itself might very well form the subject of a separate paper.

I cannot conclude without thanking Mr. W. M. Wilson, of the firm of Nasmyth, Wilson, & Co., for his kindness in lending the various photographs which are here displayed, and my thanks are due also for the kind and considerate attention that you have given to my efforts to place before you a few points, I hope of interest, in connction with the locomotive in a few of its various types. And although my efforts may appear crude, my apology must be my inexperience in literary matters, and as the subject is of some importance, the hope of learning something in the discussion which I trust may follow.

DISCUSSION.

The President in opening the discussion, complimented Mr. Bolas on the excellence of the paper, and said it was in no sense crude, but on the contrary a remarkable digest of facts which none but a specialist could have focussed in the manner which had been done in his paper. Alluding to the recent race to the north, the President said there always seemed to be some doubt as to the exact speed of the engine at any one point, and it struck him as being remarkable that no one had adopted the plan of taking a diagram of the train in progress, which would be much more reliable than the guard's report, and certainly be very useful in comparing results.

Mr. A. Gem, after expressing his appreciation of the paper, said Mr. Bolas seemed to infer that the economy gained in the compound engine would not be such as would meet its increased cost. In his opinion, however, the Worsdell engine could be built for very little more than the ordinary engine, it being in construction so slight a departure from the latter type. Alluding to the Webb compound engine, Mr. Gem remarked

that the three cylinders seemed to him to be superfluous, unless it could be shown that the engines could be run at a higher speed, and were of greater haulage efficiency. The end aimed at in a compound locomotive, viz., working to a high degree of expansion, might however be obtained with cylinders of equal diameter, provided an abnormal amount of lap was given to the valve; the difficulty in the way of this seemed to be that in certain positions both steam ports would be covered, and the engine would require a starting valve.

Mr. T. Daniels said one of the most important requisites of a locomotive was that the boiler should be as large as it could be effectively made, in fact he might say that given a good boiler, then all things being equal, it would be a good engine. To that part of the locomotive, M. Marie, the French engineer, was now devoting considerable attention, it being his intention, Mr. Daniels believed, to make a boiler 30ft. long.

With reference to the metals of which the wheels were made, he might say that cast steel was being experimented on for that purpose, and it certainly seemed to him that if those experiments were in any way successful, that wrought iron would be eventually superseded.

As regarded the dome on a locomotive engine, he could not understand why the Messrs. Stirling invariably dispensed with it on their engines, and to his mind it was a mistake, since if there was too much water in the boiler it would of necessity be drawn with the steam into the cylinder, and there cause trouble.

With respect to the future of the Webb improved engine, he did not think it would achieve any commercial success. He had more hope of Mr. Worsdell's compound engine, because its construction seemed to him to be more in keeping with the ordinary type of engine. The starting valve in Mr. Worsdell's engine, by which the high pressure steam was used in both the cylinders, was a very ingenious arrangement. Another disadvantage to the compound engine was the necessity of using high pressure steam, and not being able to work with low pressure steam as in other locomotives, and thus causing heavy wear on the boilers. It was very expensive to construct the compound engines in the first instance, but

the expense would certainly be increased when the boilers had to be re-constructed.

Proceeding, Mr. Daniels said it was somewhat remarkable that all locomotive engineers generally adopted the arched fire box outside, the top of it being packed with stays, around which in course of time the sediment formed to such an extent that the best part of the steam generating portion was covered up and ineffectual. The Belphaire box, on the contrary, was flat, and so had the same amount of steam generating space on the top as at the sides of the box. He had tried the roof stay boxes with the old fashioned stay on and they deflected considerably, and he had also tried the others and they did not deflect more than a line, thus showing at once that the latter were stronger, and had also the advantage of having extra steam space.

Before concluding he would like to ask Mr. Bolas what was the most important point to be considered in the design of a locomotive valve motion; secondly, which type of locomotive described had the best proportioned boiler and cylinders in relation to each other; further, how much better an engine would the "Great Northern" be supposing it had single leading wheels instead of a bogie? He might say that bogies, in his opinion, were superfluous weight unless there were bad roads and sharp curves to contend with. Lastly, he would like to ask Mr. Bolas why some tyres were inclined and others level on the tread, and which were the best for curves?

Mr. H. Guthrie hoped that Mr. Bolas would continue the subject of locomotives in another paper, when he might have an opportunity of more fully referring to several points which had been mentioned in the discussion. Proceeding, Mr. Guthrie said that he understood one of the greatest objections to admitting high pressure steam to the low pressure cylinder was that possibly the whole pressure of the boiler might come on the large piston, whereas the piston rods and crank pins were not prepared to receive such pressure, and he believed it had been known for the piston to slip over the piston rod itself. That seemed to him to be one of the chief points of progress in the future of the compound engine. The several merits of the Webb and Worsdell compound engines had been subjected to

considerable discussion in the engineering papers, but experience in being in a train with a Webb compound engine shewed that if the low pressure cylinder happened to be in unison with one of the others at starting, a back motion was given which caused a sudden jerk not at all pleasant. No such effect was witnessed with the Worsdell engine, because the motion was exactly the same as in the ordinary engine.

There was one particular point which he hoped Mr. Bolas would develop on in a future paper, and that was the several merits of the different valve gears It was maintained that the Joy gear was cheaper to construct than the ordinary Stevenson link motion, though why he could not say, and further that the wear and tear was no greater in the former than in the latter motion. He did not see, however, how that assertion could be maintained for a moment, seeing that in the Joy motion the block is slid from end to end every revolution, whilst the sliding movement in the Stevenson gear was comparatively microscopic. Again, the Joy gear was the most complicated of the two, though certainly it had the merit of being more adaptable to outside cylinder engines than the Stevenson motion.

Mr. T. Ashbury said it was somewhat remarkable that Mr. Patrick Stirling, in spite of all experience, had adhered to his own style of engine for so many years, and at the present time was in the prominent position of having an engine which would probably do the greatest amount of work, compared with any other engine of the day, and that too with all the disadvantages existing on the Great Northern line. Referring to the recent race to the north, Mr. Ashbury said it was remarkable that some of the most marvellous runs had been done by the older type of engines, and certainly it redounded to the credit of the designers of those engines.

Mr. Ashbury concluded by moving a vote of thanks to Mr. Bolas for his able and interesting paper.

Mr. Smethurst seconded the motion, which was carried with acclamation.

Mr. Bolas, in replying, said he thanked them for the vote of thanks which had been passed in such an encouraging manner, and in response to the request for a further contribution he should be only too glad to continue his subject on some future occasion.

In reply to Mr. Daniels' questions: first, as to the most important points in connection with a locomotive valve motion, he was afraid that the question opened out such a wide field that a volume would be required to satisfy its claims.

He would, however, take a few points of importance in the Stephenson's link motion, working direct, which was the most common. A long connecting rod and eccentric rods are indispensable for good results, while the most important point was the suspension of the expansion link, which should always be attached to the lifting links, at or about the centre of its length, either before, behind, or on the centre line of the links radius, according to the arrangement of the other parts. When well proportioned this gave splendid results. In fact in a motion designed a short time ago, the points of cut-off, release, and compression in the first three notches in both backward and forward gear were practically equal, being within ½ per cent of each other in the worst notch. The position of the reversing shaft in relation to the link was also of moment, this having a great effect on the results. The expansion link was often suspended from one end, which always gave a bad result for one gear, if the reversing shaft was not placed so that the point of support of the lifting link was well in advance of the expansion link. This caused a great amount of slip of the block in one gear, while when the link was hung by its centre the slip was very slight.

As to the relation between cylinder and heating surface: this could not be fixed at any constant ratio, as the heating surface should be proportional to the horse power to be exerted; then the degree of expansion which was to be worked, the power of the blast, and the nature and heating powers of the fuel had to be taken into consideration. Heating surface itself, when taken as "slump" area was misleading, as they might have tubes closely packed in the boiler, and thereby gain in heating surface while they impeded the circulation; again, the boiler barrel might be lengthened until the smoke-box end of the tubes would be useless, and the fire-box roof might be narrow and such a

distance from the level of the fire that its efficiency would [illegible] impaired. Thus it would be seen that this was a question [illegible] which many factors had to be taken into consideration. It w[illegible] the rule now to get as much heating surface as possible (wi[illegible] due regard to the circulation) on the 4ft. 8½in. gauge expre[illegible] engine, and they had about five square feet of heating surfa[illegible] for each square inch area of one cylinder, and work well at th[illegible]

In reference to the question about the Great Northern engi[illegible] although the bogie enhances the weight and cost of the engi[illegible] it was almost a necessity, as the boiler barrel was of sm[illegible] diameter and extra length.

As regards the question of the coning of tyres: Mr. Bolas s[illegible] tyres were coned so that when the engine took a curve the ty[illegible] on the outside being forced with its flange hard against the ra[illegible] the wheel was virtually of larger diameter than the one on t[illegible] inside, which was treading on the small end of the cone, and t[illegible] engine having as it were wheels of unequal diameter, roll [illegible] easily round the curve; the tyres being coned to suit the p[illegible] vailing curve. Many engineers, however, preferred the ty[illegible] parallel on the tread, they contending that the cone could o[illegible] be suitable for one radius of curve, while the disadvantage [illegible] that the engine might be running on wheels of unequal diam[illegible] when on the straight line; they relied on the centrifugal fo[illegible] throwing the weight on to the outer wheels which allowed the inner wheels to slip.

In reference to Mr. Guthrie's remarks on locomotive valve [illegible]motions, he entirely agreed with him with regard to the wear of the Joy's gear, and there was no doubt that the sliding of the blo[illegible] in the reversing quadrant was fatal to economy in its maintena[illegible]ce.

In conclusion Mr. Bolas again thanked them for the kind attention and consideration which they had accorded to his paper.

PLATE

I

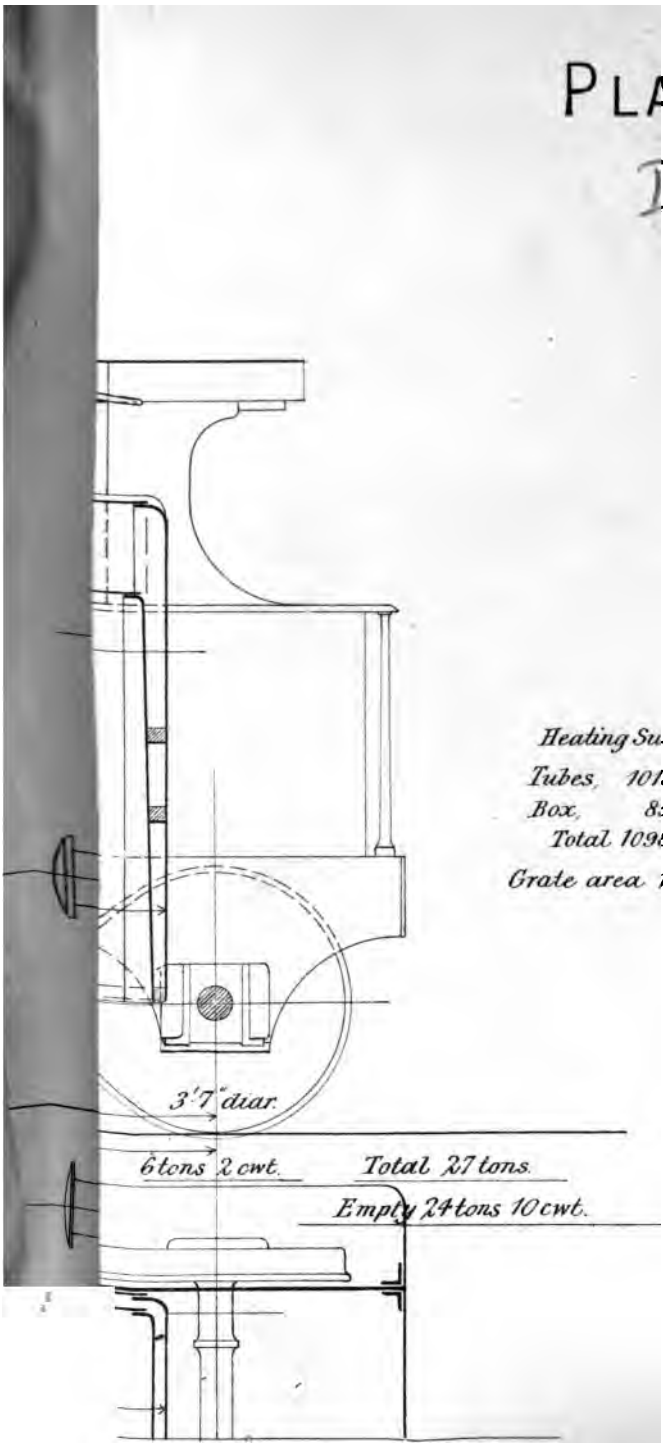
Heating Surface.
Tubes, 1013 sq.
Box, 85 "
Total 1098 "
Grate area 15 sq.
3'7" diar.
6 tons 2 cwt.
Total 27 tons.
Empty 24 tons 10 cwt.

[illegible]

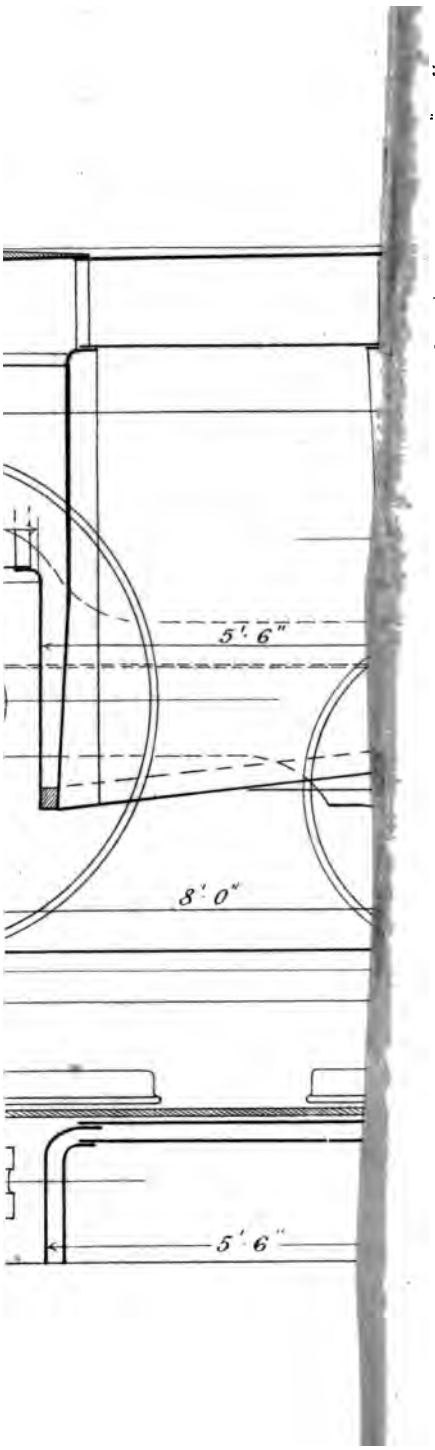
5' 6"
8' 0"
5' 6"

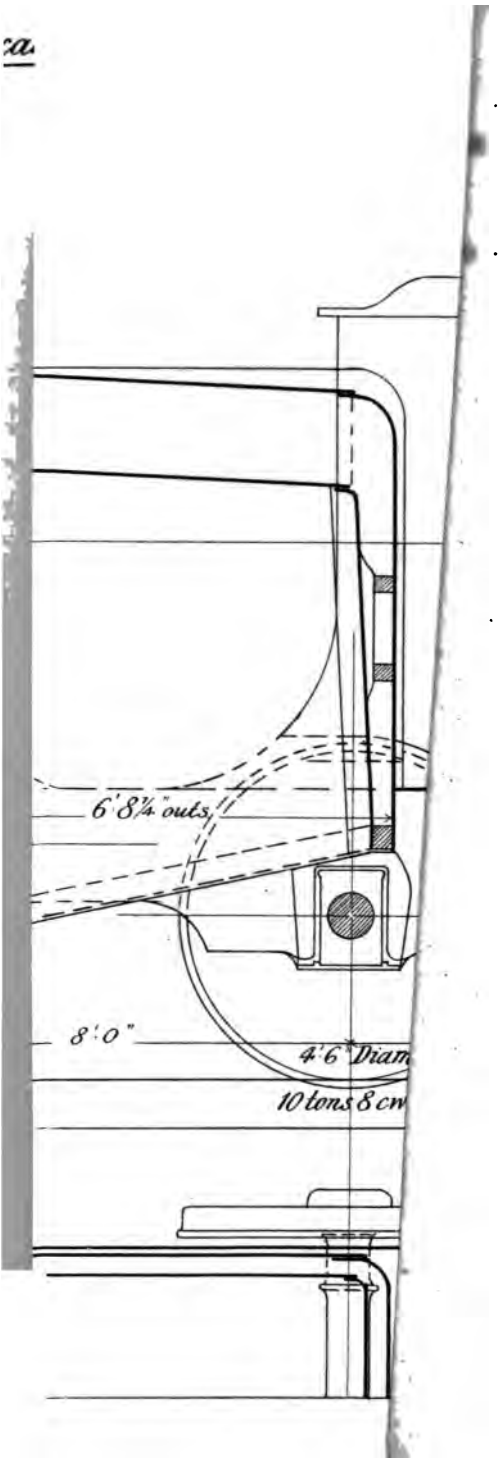
6' 8¼" outs.
8' 0"
4' 6" Diam
10 tons 8 cm

45

33RD Annual Report

OF THE COUNCIL,

1888.

MANCHESTER:

HERALD & WALKER, TYP., BACK POOL FOLD, OFF CHAPEL WALKS.

1889.

OFFICERS.

1889.

President:

MR. SAMUEL DIXON, M. INST. M.E.

Past-President:

MR. ALDERMAN W. H. BAILEY, J.P.

Treasurer:

MR. HENRY MAINWARING.

Trustees:

MR. ALDERMAN E. ASQUITH,
,, G. CARTER,
MR. JAS. WALTHEW,
,, T. ASHBURY, C.E.
MR. ALDERMAN W. H. BAILEY.

Council:

MR. J. HARTLEY,
,, W. LAWSON,
,, S. ECROYD.
MR. S. BOSWELL,
,, W. J. JENKINS,
,, FRED. WALTHEW.

Secretary:

Assistant Secretary and Librarian:
FRANK HAZELTON,
15, Raglan Street, Hulme.

Annual General Meeting

HELD AT THE

GRAND HOTEL, MANCHESTER,

8th December, 1888,

Mr. SAMUEL DIXON, M.Inst. M.E., President,

IN THE CHAIR.

THE minutes of the previous meetings having been read and confirmed, and signed by the President,

The Chairman announced to the meeting the result of the ballot for the election of new members.

The election of President and other Officers of the Association was next taken, with the result as set forth on opposite page.

Resolved unanimously,—"That the cordial thanks of this meeting be given to Mr. Samuel Dixon, for the deep interest he has taken in the welfare of the Association; for the excellent manner in which he has discharged the duties attaching to the Office of President during the past year; and especially for the urbanity and tact he has at all times displayed in the chair."

Mr. Dixon returned thanks.

Resolved unanimously,—"That the thanks of the Association are justly due and are presented to the Past-President and other Officers of the Association for their co-operation with the President, and for their zeal on behalf of the Association during the past year."

Messrs. Asquith and Mainwaring returned thanks.

Resolved unanimously,—"That the Annual Dinner be l as usual; all arrangements to be left in the ha of the Council."

Resolved unanimously,—"That the Council be reque to consider the question of the revision of r regarding the admission of members, and to rep thereon at a future meeting."

Resolved unanimously,—"That payment of Superannua allowance, in accordance with Rule 14, be mad Mr. G. Vickers."

Resolved unanimously,—"That the Annual General Mee stand adjourned."

ADJOURNED ANNUAL GENERAL MEETING,

12*th January*, 1889.

Proposed alteration to Rule 14, "Superannuation allowe members."

Resolved unanimously,—"That the words 'and whose pers income, from all sources, does not exceed th shillings per week' be erased and the following w substituted: 'and whose income, from all sources, d not exceed twenty shillings per week."

ANNUAL REPORT OF COUNCIL.

1888.

:E Council in submitting to the Members their 33rd Annual port, have pleasure in being able to point to the progress and vancement made during the past year.

To the membership roll during the year have been added—

1 Honorary Life Member.
10 Honorary Annual Members.
16 Ordinary Members.

Total 27

t taking into account the loss by death, resignation, and asure, the effective addition to the membership roll only nounts to 7, bringing up the total number of names of all asses on the roll to 323, namely:—

27 Honorary Life Members.
87 Honorary Annual ,,
209 Ordinary ,,

Upon reference to the Financial Statement as certified by the ditors (see appendix), it will be seen that the balance standing the credit of the Association after payment of all accounts e up to the 31st December, amounts to £2,713 19s. 10d. as ainst £2,568 1s. 3d. at the close of the preceding year, thus owing a surplus of £145 18s. 7d. on the year's working. ving to the number of members who have claimed and been varded Superannuation Allowance, it has only been possible to y to each superannuant the sum of 5s. per week. The Council e anxious that this small allowance should be augmented, and e co-operation of the members and friends of the Association this direction is again respectfully solicited.

It is with profound regret the Council have to recor during the year death has removed the following Me memoirs of whom are appended on pages 231 to 234 accordance with resolutions, letters of condolence and syn have been forwarded to the widows and families of the de members :—

Anderson, D. - - -	St. Helens.
Bawden, W. - - -	Manchester.
Britton, W. - - -	Bristol.
Haigh, W. B. - - -	Oldham.
Moulton, G. - - -	Manchester.
Rawlinson, R. - - -	,,
Wood, T. - - -	Bolton.
Yates, W. - - -	Southport.

The following gentlemen have resigned their Members the Association during the past year :—

Dews, F. - - -	Birmingham.
Morton, R. - - -	Manchester.

The following gentlemen have ceased to be Members Association during the past year :—

Annable, W. - - -	Sheffield.
Chambers, F. - - -	Ilkeston.
Campbell, H. - - -	Elland.
Dyson, J. - - -	Sheffield.
Forrest, A. - - -	Manchester.
Frankish, A. - - -	,,
Giles, A. - - -	Salford.
Napier, W. - - -	Stamford.
Read, H. G. - - -	Altrincham.
Urmson, J. - - -	Oldham.

The Council have great pleasure in referring to the n and practical importance of the papers that have presented to the Association during the past year, and tak opportunity of expressing their thanks to the authors papers for the valuable information they have thereby fur to the Association. The Council confidently anticip continued advance in the importance and number of the munications to be brought before the Association, and

trust that all the Members will aid, as far as they have the opportunity, in advancing the objects of the Association by contributing papers on Engineering subjects that have come under their observation and investigation, and communicating the particulars of executed works, with the results of their practical working, whether successful or unfavourable, that may be serviceable and interesting to the members.

PAPERS READ DURING THE SESSION.

14th Jan.—On "**Modern Machine Tools.**" Inaugural Address by the President, Mr. Samuel Dixon, M.Inst.M.E., of Salford.

28th Jan.—On "**The Economy of Health in Workshops,**" by Mr. J. Corbett, of Manchester.

25th Feb.—On "**Anderton Hydraulic Lift,**" by Mr. Lionel B. Wells, C.E., of Northwich.

10th Mar.—On "**Ring Spinning,**" by Mr. Joseph Nasmith, of Manchester.

24th Mar.—On "**The Thermo-Dynamic Analysis of the Gas Engine,**" by Mr. H. Guthrie, of Manchester.

27th Oct.—On "**Patents and Patent Law,**" by Mr. J. A. Bennion, M.A., Barrister-at-Law.

10th Nov.—On "**The Forth Bridge,**" by Mr. Thomas Ashbury, C.E., of Manchester.

24th Nov.—On "**Some Types of the Modern Locomotive,**" by Mr. James Bolas, of Manchester.

All the above papers with the exception of one, have been published and issued to the members in transaction form, together with the discussion thereon.

It is gratifying for the Council to record that during the year there has been a steady increase in the attendance of Members at the meetings of the Association. The average attendance during the sessional meetings has been 98, and during the summer months 35.

THE Thirty-second Anniversary Meeting and Dinner took place on Saturday, the 11th February, at the Grand Hotel, Manchester, on which occasion the Chair was very ably filled by the President of the Association, Mr. Samuel Dixon, M.Inst.M.E., and the Vice-Chair by Mr. Thomas Ashbury, C.E. The chief guest of the evening was Mr. Alderman W. H. Bailey, J.P. 103 members and friends were present.

Mr. E. LEADER WILLIAMS, C.E., in proposing the toast of the evening, "Prosperity to the Association," said it was 15 years since he first made the acquaintance of that Association, and ever since he had felt a very warm interest in its welfare, but never before had he been placed in so prominent a position as on that occasion. After remarking upon the generally satisfactory report which had just been read, and to the influence which the Association was exerting amongst engineers, he observed that an example had been set to everyone by George Stephenson; his life was an example of an honest endeavour all through to get out the very best work, and if a man would rise in their profession, he must follow the same line of conduct. England, so long as it turned out the best quality of work, would maintain its supremacy all the world over, but if a mechanical engineer attempted to "scamp" his work, he would very soon be found out. So long as they put all their endeavours to turning out the very best work possible, they would be in no fear of falling behind their Continental competitors. He was reminded that on a previous occasion he had made a promise that he hoped some day to show the members over the works of the Manchester Ship Canal; he should now be glad to carry out that promise, and he would leave it to the Council to select what portion of the works they would like to inspect. He might tell them that they would see there the best development of steam excavators as they were now produced. There were some half-dozen of them from America, another one from Germany, and there was one also from France, so that they were having a great international struggle on the Ship Canal in this important branch of excavating work. The excavators employed on the length of this canal would be equal to the work of 10,000 men. The work was done with rapidity and certainty, and without the possibility of a strike. He was sure they would be glad to hear that they had made a

very good start. On one cut alone, 120,000 yards had been excavated. Mr. Walker, the contractor, had put down splendid plant of all descriptions. He had given out his orders, as far as possible, in the district where the money was being found, and he (Mr. Leader Williams) was sure he would finish his work within the stipulated time. In conclusion, he said the members of that Association were engaged in one of the noblest professions to which men could be devoted, and to learn something of what the engineering profession had done, they had only to look back over the last sixty years to see how enormously it had helped forward the development of all the most important interests of their country.

The Chairman responded on behalf of the Association. He said they were all proud of the career of their Association; it formed a bond of union and an excellent means of discussion upon questions important to their profession. The Association had done a great work in the past, and it had a great future before it. Perhaps one important question which the Association might very well take into consideration was the great cry at the present time for technical education. There was one phase of this question which concerned them very intimately as a body of engineers. The training of youths in the engineering trade had been defective and haphazard. Under the present system, youths might acquire the use of tools, &c., yet in the knowledge of first principles their instruction remained very defective. The present cry for technical education would seem to imply that no such means previously existed, but for engineers it had been in existence for many years past. Hitherto, however, there had been two distinct types of engineers:—One the "schoolmen," with a knowledge of the geometry of mechanism and general principles, but lacking workshop experience, upon which they looked with a kind of supercilious air. The other type might be called the "practical" men, fully acquainted with chipping and filing and the use of tools, but knowing little of theory They had all seen each of the two types sin most grievously for the want of the knowledge which the other possessed. At the present day there was a strong tendency towards the fusion of these two types, and in bringing about this fusion that Association should make its voice heard. Their

special object should, of course, be in directing the proj
training of youths in engineering workshops. Under the pres
system this was left very much to the choice of the youths, l
discipline should be introduced requiring that a technical traini
should be obtained through the medium of evening study.
Manchester, all the "ologies" were taught, and the you
studiously disposed, was bewildered as to what he should re
and which could be done first, with the result that he oft
turned away in despair by having nothing to guide him. Wl
he would propose was that their Association should warmly ta
up this question, and thoroughly debate and determine the ch
branches of study to which the youth engaged in their engineeri
establishments should devote their special attention in t
evening classes. He would further suggest that a syllabus
pamphlet should be issued, under the authority of the Associatic
at a nominal price, which might be placed as a guide in the har
of every youth entering their workshops. He would strongly ur
that they, as an Association, should make their voice hea
in this matter, and not leave it to outsiders. What body of m
was more competent to deal with such a question than they, w
had felt the urgent need of a proper training, the want of whi
had probably to be rectified at a later period of life by very ha
work? He was personally disposed to make yearly promoti
depend upon having acquired a standard of technical knowledg
He was led to make these observations from numerous applic
tions which he had received for advice in such matters by bo
youths and parents, and he felt strongly upon it. He urged the
not to leave their youths floundering about for the want of son
efficient guide; he thought, as an Association, they should stret
out a guiding hand. Their past as engineers had been brillian
and their future would very largely depend upon what th
should make it.

Mr. Thomas Ashbury, C.E., in very eulogistic terms, propos
the toast of "The guest of the evening," coupling with it tl
name of Mr. Alderman W. H. Bailey, the late president. F
the last three years, he said, Mr. Bailey had occupied the positi
of President of that Association, and during the time of l
membership he had read no less than 15 papers, not includi
his presidential addresses. During the whole period of his offi

he had discharged his duties with the greatest satisfaction to all, and the services he had rendered to the Association would long be remembered.

Mr. Ald. Bailey, in responding, after thanking the Members for the kindness shown to him, not only on that occasion, but on every other occasion when he had met them, referred to the question of technical education. In this matter, he said, what they had before them was to combine theory and practice. He quite agreed with the very sensible remarks of the President, and he was right in saying that the work of technical training would have to be done by evening classes, and the best method by which this could be accomplished might very well be moulded into shape by that Association. The poorer lads engaged in their workshops must be looked to from an entirely different point of view compared with children of the more wealthy classes. The poorer youths were of necessity compelled to learn the practical part of their training in the workshops, and then to obtain their theoretical knowledge necessary, by means of night classes, and that Association should make itself particularly felt by showing the sort of class books which would enable these youths to obtain that knowledge which would be the most useful to them in the trades they were following. It is an economy of force in the technical schools that they need, and they should endeavour to point out the right direction in which study for any particular industry should be followed. It is no use expending a youth's force in learning chemistry when he was going to be engaged in making steam pumps. Evening classes should show to young men when they had obtained situations their deficiencies and provide a means of remedying their defects; their action should be in the direction which Huxley had spoken of as "capacity-catching machinery," whilst they would do well to keep before the mind of the student the lines that Longfellow had written—

> "Examine yourself, and learn to know full well
> Wherein kind nature has meant you to excell."

That Association had had a great influence in the two great movements in Manchester recently—the Manchester Ship Canal and the Manchester Royal Exhibition. Both these had been greatly assisted by the Members of that Association, and as the

one had been a triumphant success, so they believed they would achieve an equal triumph in the Manchester Ship Canal.

Mr. J. Nasmith proposed "Our Municipal Corporations," which was responded to by Mr. Ald. Asquith for Manchester, Mr. Ald. Bailey for Salford, and Mr. Ald. Buckley for Oldham.

The toast of "Kindred Associations," proposed by Mr. Horsley, was responded to by representatives from Leeds, Newcastle, and Middlesborough Association.

LIBRARY.

The Council are pleased to report that the Library continues to fill a very important place in the Proceedings of the Association. The number of books issued during the year has been in advance of that of any previous year. The following new books have been purchased :—

Advanced Geometry. Angel.
Algebra. Todhunter.
Arithmetic. Colenso.
Boiler and Factory Chimneys. Wilson.
Conservation of Energy. Stewart.
Electricity and Magnetism. Deschanel.
Electricity in Theory and Practice. Fiske.
Elementary Geometry. Wilson.
Elementary Physics. Stewart.
Euclid. Colenso.
Iron and Steel. Greenwood.
Mechanics. Deschanel.
Mechanics. Wormell.
Mechanics for Beginners. Todhunter.
Mechanics and Mechanism. Tate.
Metallurgy. Greenwood.
Orthographic Projection. Binn.
Plane and Solid Geometry. Edgar and Pritchard.
Plane Trigonometry. Walmsley.
Plane and Solid Geometry. Angel.
Practical Chemistry. Jones.
Practical Engineers' Hand Book. Hutton.
Pump Construction. Björling.
The Mechanics of Machinery. Kennedy.
The Property and Treatment of Metals. Bloxham.

The Council have pleasure in acknowledging the following donations, and in expressing their thanks to the donors for the valuable and acceptable additions they have thereby made to the Library:—

American Institute of Mining Engineers. Transactions, 1888.
Applied Mechanics. From Mr. T. Cryer.
Canadian Institute, Toronto. ,, 1887.
Engine, Boiler and Employers' Liability Insurance Company. Chief Engineer's Report, 1887.
Franklin Institute, America. Journal, 1888.
Institution of Civil Engineers. Transactions, parts 2 & 3, 1887-8.
,, Engineers and Shipbuilders in Scotland. Transactions, 1888.
,, Mechanical Engineers. ,, 1888.
Iron and Steel Institute. Transactions, 1888.
Leeds Association of Foremen, Engineers, and Draughtsmen. Proceedings of Session, 1886-7.
Liverpool Engineering Society. Annual Report, 1887. Transactions, 1886.
Liverpool Geological Society. Transactions, 1887-8.
London Association of Foremen Engineers. Annual Dinner Report, 1888, and President's Address, 1888.
Machine Construction and Mechanical Drawing. From Mr. T. H. Cryer and Mr. H. G. Jordan.
Manchester Association of Enginers. Transactions, 1887.
,, Geological Society. ,, 1887-8.
,, Statistical Society. ,, 1887-8.
,, National Boiler Insurance Co. Chief Engineer's Report, 1887.
,, Literary and Philosophical Society. Proceedings, 1885-6-7.
Midland Inst. of Mining, Civil, and Mechanical Engineers. Transactions, 1888.
Mining Association and Institute of Cornwall. ,, 1888.
Mining Institute of Scotland. Transactions, 1888.
Newcastle and District Association of Foremen, Engineers, and Draughtsmen. Annual Report, 1887.
Notes on the Ventilation of Cotton Mills. From Mr. J. D. Sutcliffe.
North of England Institute of Mining and Mechanical Engineers. Transactions, 1888.
North-East Coast of Engineers and Shipbuilders. Transactions, 1887-8.
Society of Arts. Journal, 1888.
South Wales Institute of Engineers. Transactions, 1888.
Society of Engineers. Transactions, 1887, and General Index, 1861-1886.
Specification of a Lancashire Boiler, with Plan of Setting and Mode of Staying. From Mr. W. H. Fowler.
The Jubilee of Crewe, containing a brief history of the rise and progress of the Borough. From Mr. F. W. Webb, C.E.
The Severn Tunnel; its Construction and Difficulties. From Mr. T. A. Walker, C.E.

British Architect. From the Proprietors.
Colliery Guardian. ,,
Electric Review. From the Editor.
Engineer. ,, ,,
Engineering. From the Publisher.
Gas and Water Review. From the Editor.
Gas Engineer. ,, ,,
Industries. From the Proprietors.
Invention and Inventors' Mart. From the Editor.
Iron. ,, ,,
Iron and Coal Trades' Review. ,, Proprietors.
Journal of Gas Lighting. ,, Editor.
London Iron Trades' Exchange ,, Proprietors.
Marine Engineer. ,, Publisher.
Mechanical Progress. ,, Proprietors.
Official Journal of the Patent Office. From the Deputy Comptroller-General, J. Clark Hall, Esq.

Appreciating the desirability of enlarging and improving the Library, the Council again respectfully invite the Members to make donations of books, original pamphlets, drawings, &c. To enhance the value of the Library, the Council are always willing to receive, and if practicable, to act upon recommendations from the Members for augmenting the usefulness of this important adjunct to the Association.

OPENING OF DISCUSSION SESSION.

As a means of further increasing the good feeling which already exists amongst the Members of the Association, and to bring each member's individuality into greater prominence, the Session, instead of being inaugurated with the usual address, was opened with a Social Evening, when upwards of 90 members assembled at the Grand Hotel, on Saturday, the 13th October, and had tea together. On its conclusion the President made a few interesting remarks suitable to the occasion and referred to the syllabus of papers to be read during the Sessional Meetings

The remainder of the evening was spent in a social manner, being diversified with vocal and instrumental music, readings and recitations.

TECHNICAL EDUCATION.

Consequent upon the remarks made by the President at the last Annual Dinner, regarding the proper training of youths in engineering workshops, the Council brought this subject definitely before the Association, and, after several discussions, a Special Committee was appointed to draw up for publication, under the authority of the Association, a syllabus of subjects deemed desirable branches of study for youths entering engineering workshops, and indicating at the same time the relative importance of those different branches.

The Special Committee's conclusions were embodied in a pamphlet, entitled "The Technical Education of Engineers," which, besides being distributed to the Members of the Association, was issued to the public at the nominal price of 2d. each.

The pamphlet has received the most unqualified approval of every section of the press, and up to the present time, about 3,000 copies are in circulation, a considerable number of which having been ordered from and sent to America, which is very gratifying considering that the pamphlet has not been advertised.

ENGINEERING EXCURSIONS.

Two Engineering Excursions have been held during the past year; the first on 6th July, to the Forth Bridge, and the second on 22nd September, to the Eastham Section of the Manchester Ship Canal. Interesting records of these visits are given on pages 235 to 240.

RESIGNATION OF SECRETARY.

In the latter part of the year, owing to an increase in the importance and responsibilities of his daily engagements, the secretary was compelled to send in his resignation to the Council, which they accepted with the deepest regret. Mr. Fred. Walthew has been connected with the Association for upwards of 18 years, the last ten of which holding the position which he has now vacated, and to which he was elected in the year 1878.

Considering the marvellously effective services he has rendered to the Association, the Council felt they would not be representing the feelings of the members unless they endeavoured to express to Mr. Walthew in some tangible form, the esteem in which he was held by the entire Association, on account of the ability and courtesy which he has at all times displayed in conducting its affairs. A Special Committee, therefore, was appointed to carry this into effect, and as a result of spontaneous and voluntary contributions from the members, the President was enabled to present to the Secretary at the Annual General Meeting, Dec. 8th, a handsome gold watch, guard and pendant; also a diamond brooch for Mrs. Walthew.

As a further testimony of their esteem, the members unanimously elected Mr. Walthew an Ordinary Member of the Association, and also a member of the Committee of Management.

Whilst congratulating the Members on the work accomplished and progress made during the past year (as epitomised in this Report), the Council see no reason why in future years the progress should not be even more satisfactory, and your Council look confidently to such a result if each Member will use his best endeavour to strengthen the influence of the Association.

OBITUARY.

David Anderson was born 12th May, 1830, at Carny Hill, Dumfermline, Fifeshire, and was educated at a local school in Strathkinness, near St. Andrews.

Leaving school, he went to serve his apprenticeship at Mr. Douglas Eden's Foundry, Coupar, Fife, on the termination of which, after several minor engagements, he worked at the Brittania Works, Derby. From this place he proceeded to Manchester, where he was employed at Knott Mill Iron Works. He continued with Messrs. Galloway for a few years, and then went as manager to Messrs. Neil's, Chemical Engineers, St. Helens, with which firm he remained during the last 15 years. He died on 1st January, 1888.

His unassuming character, won the esteem and regard of all who came in contact with him.

He was elected an Ordinary Member of the Association in June, 1876.

William Bawden was born in the parish of Gwennap, near Truro, Cornwall, on the 15th July, 1824. In 1825 the family removed to Mold, in Flintshire, his father being appointed mining engineer to the mines at that place. He commenced his apprenticeship in the year 1840, and on its completion he undertook the management of the Smelting and Engine and Boiler Making Departments at Coed Talan Ironworks. Leaving this place in 1847, he became principal draughtsman for Messrs. Garnett and Moore, Liverpool, with whom he remained till 1850, when he went to Bolton, being engaged with the firm of Hick & Son, in a similar position.

For upwards of 10 years during his residence in this town he was actively connected with the Mechanics Institute, being the teacher of the Mechanical Drawing Class, which he conducted in such a satisfactory and successful manner as to elicit the highest commendation from the Committee of the Institute.

In 1865, owing to his eyesight becoming impaired, he was compelled to relinquish the position which he held at Messrs. Hicks. He then became assistant engineer to the Boiler Insurance and Steam Power Company, Manchester, in whose service he remained till his death.

He died on the 4th December, 1888, at Craigland's Hydropathic Establishment, Ilkley, where he had gone for the benefit of his health.

Mr. Bawden was of a genial and kindly disposition, and won the esteem and respect of all who were acquainted with him.

He was elected an Ordinary Member of the Association in March, 1866, and was president in 1873. On the 8th November, 1873, he communicated an important paper on "The Indicator Diagram."

Joseph Britton was born at Oldland, near Bristol, 20th April, 1839. After receiving his education at St. Mark's School, Easton, he served his time at Messrs. T. and E. Bush, Engineers, Millwrights, &c., of Cheese-lane, Bristol, there successively passing through the various branches of engineering. His apprenticeship ended, he went to Southampton, and was employed on the mail boats of the "West Indian Mail Co.," plying between this country and the West Indies, and was afterwards, for some little time, acting as engineer on the boats of the "Intercolonial Mail Co.," in the West Indies. Returning to England, he obtained a situation at the Avonside Engine Works, Bristol, where he continued as foreman in the Marine Erecting shop until the winding up of that company. Subsequently for a short period, he superintended the erection at Sheffield of "Fairlie's Patent" and other locomotive engines for abroad. Latterly he entered the employ of Messrs. Newall & Co., Engineers, St. Philips, Bristol, where he acted as foreman till his death, which took place on 12th March, 1888.

He was elected an Ordinary Member of the Association, March, 1881.

William Blackett Haigh was born in Oldham, on 14th February, 1855, his father, the late W. B. Haigh being then in business as a manufacturer of wood-working machinery. He was educated first at Tait's School in Oldham, and afterwards at a college at Blackpool.

Entering his father's works in the year 1871, he served a considerable time as a fitter, and being an apt scholar, and naturally inclined to mechanics, he was fully competent to take the management of the works on his father's decease in 1883. In that position, his practical knowledge of the business, combined with an inventive turn of mind, enabled him to initiate many improvements in the production of machinery for working wood, which certainly did a great deal towards placing the firm in its present position.

About five years ago symptoms of consumption showed themselves in his constitution, and on the advice of the highest medical authorities, he went a voyage to Australia, and after 8 months sojourn in that country he returned to England, apparently recruited in health and strength Appearances, however, were very deceptive, for very soon his old complaint returned, and a second time he paid a visit to Australia, and on returning to Europe again, proceeded to Germany, where under the treatment of Dr. Brehmer, at his sanitary establishment in Silesia he remained some time but unhappily without receiving any benefit. He died on the 15th December, 1888, and was interred at Greenacre's Cemetery.

Mr. Haigh was enrolled an Ordinary Member of the Association, in December, 1884.

George Moulton was born 30th September, 1823, in Bradford-road, Manchester. He was educated first at a Mr. Bell's school, in Ancoats, and afterwards at that of Mr. Black, in the same district. He was first intended

for the building trade (his father being a master bricklayer), but agreeably to his own wish he was allowed to become a mechanic, being engaged with Mr. Charles Pooley, the well-known cotton spinner, of Bradford-road, with whom he remained till the year 1845. On leaving this firm, he went to Barber's Engraving Works, where he got his first practical insight into the business which subsequently he embarked in, and made his speciality.

In 1852 he commenced business with seven other gentlemen, trading under the title of J. Smith & Co.; the seven partners retired in 1855, their place being taken by a Mr. H. Garside.

In 1858, this last partnership was dissolved, and for the past 30 years Mr. Moulton carried on the works in Whitley street, solely on his own account.

The invention of the pentograph then by Rigby, was improved by Mr. Moulton, and from this time forward he enjoyed a wide reputation as an engravers' and calico printers' machinist and toolmaker.

The collection of machinery and tools at the Manchester Jubilee Exhibition from the works at Rochdale-road, was much admired by experts.

Mr. Moulton was all his life a worker in connection with the German-street Day and Sunday Schools. He was elected to the City Council in November, 1874, and was made an Alderman in December, 1886.

He died on 22nd July, 1888.

Mr. Moulton was elected an Ordinary Member of the Association, June, 1865, and in 1870 occupied the presidential chair.

Robert Rawlinson.—Of the many members which the Association has lost by death during the past year, Mr. Robert Rawlinson was perhaps the most widely known, for during the many years he had been a member, he had ever taken a very active part in its management. He was elected in 1866, and held almost continuously some office in the Association, being elected a Member of the Council in 1870, Vice-President in the year 1872, President in 1875, and a Trustee in 1874, which latter office he filled up to the time of his decease.

As an engineer, he was well known amongst us, having come to Manchester about the year 1845, where he was employed as foreman in the works of Messrs. W. Fairbairn & Sons, at that time the chief general engineers of the district.

For many years afterwards he was engaged in the works of Sir Joseph Whitworth & Co., carrying out the construction of a new rifle then being brought out by that firm.

This engagement he terminated to take the general management of the works of Messrs. Smith & Coventry, where the construction and improvement of machine tools became for about 12 years his chief study.

In the year 1880 he became a partner in the firm of Messrs. Kendall & Gent, where he took an active part, and remained a member to the time of his death.

As an engineer he was distinguished for considerable fertility in design, but particularly for his thoroughness in workmanship, accuracy in construction being pre-eminently his great object to ensure.

Of his genial presence we shall ever retain the most pleasant recollections, and of his devotion to the interests of our Association, its records amply testify.

He died 6th November, 1888, at his residence, Old Trafford, and was interred at Cheetham Hill Cemetery. The funeral was attended by a large number of his workmen and friends, and also representatives from the Association.

Thomas Wood was born at Manchester in the year 1828, and was educated at the Grammar School Bury, his father at that time being in business as a cotton spinner at Elton. He served his apprenticeship with Messrs. Kay & Sons, Machine Makers, Bury, on the termination of which being engaged with the firm of Messrs. Mason, of Rochdale. From this place he proceeded to that of John Tatham & Son, of the same town, as frame foreman.

About 23 years since, Messrs. Dobson & Barlow, of Bolton, engaged him as their foreman scutcher, with whom he remained for about nine years, then removing to Manchester to occupy a similar situation at Messrs. Crighton & Sons. He eventually returned to Dobson & Barlow's, as the foreman of the Opener and Scutcher Department, having under his charge the manufacture of Lap Machine, Gassing Frames and Cotton Gins, which situation he was still holding, when he met with an accident through being thrown off an omnibus, and from which effect he died on 28th August, 1888.

Mr. Wood was elected an Ordinary Member of the Association in December, 1875.

William Yates was born at Langley Hall, near Macclesfield, 16th April, 1825. He was educated at the Manchester Grammar School, and afterwards apprenticed as engineer with the Manchester and Leeds Railway at the Locomotive Works, Miles Platting.

On the termination of his apprenticeship he was engaged on the Eastern Counties Railway, Stratford, for a period of about three years, after which he returned to the former Company and was made Shop Foreman under the superintendence of the late Mr. Jenkins, which position he occupied for about seven years. He was then appointed as Outdoor Superintendent in Running Department, and on the death of Mr. Jenkins, he was made Works Manager, which position he held until the year 1886, when a painful illness compelled him to resign and retire into private life.

He died at Southport, 26th September, 1888, much regretted by workmen and friends.

Mr. Yates was elected an Honorary Member of the Association, September, 1880.

REPORTS OF VISITS.

Forth Bridge.

The Works selected by the Council for the principal Annual Engineering Excursion of the year, were those of the Forth Bridge, which, on account of its majestic proportions, the unique design, its simplicity and magnificent workmanship, the Council deemed was worthy in every respect of a visit by the members of the Associaton, and which they were enabled to arrange through the courtesy of Sir John Fowler and Mr. B. Baker, the engineers.

The party, numbering 75, left Manchester on Friday,the 6th July, by the 2-10 train, Exchange Station, and arrived in Edinburgh (Princess Street Station). 8 p.m. Wagonnettes awaited the arrival of the party, which immediately proceeded to the Edinburgh Hotel, where a substantial tea dinner was promptly served.

On the following day, Saturday, the party proceeded in open carriages to Queensferry, situated about 10 miles from Edinburgh, at which place the Forth Bridge is in progress. The weather being exceptionally fine, and the drive being through a charming country, dotted on all sides with places of interest, the drive was heartily enjoyed by every member of the party.

On arrival at the Bridge, the party was met by Mr. Cooper, the resident engineer, who also very generously placed at the disposal of the party a special steamer for conveyance to the points of interest in connection with the bridge.

Most of the party disembarked at one of the three cantilevers which form the main structures of the bridge; afterwards, on being reconveyed to shore, the workshops which have been erected for the preparation of materials required in construction were inspected, together with models and working drawings; and after several hours had been spent in this manner, the return journey was made to Edinburgh. In the evening, the members and friends sat down to dinner at the Edinburgh Hotel.

The President, Mr. S. Dixon, in proposing a vote of thanks to the engineers, Sir John Fowler and Mr. Baker, who had kindly permitted them to visit the works, and to their representative, Mr. Cooper, who had conducted them through the works, and explained the various details, said he was sure it had been a great treat to them all to examine the gigantic structure which was to span the Frith of Forth. In that important undertaking he thought they saw very clearly two great minds at work in combination for its production. On the one hand, they had the engineers who were responsible for its design, and he thought they themselves did not fully realise what the conditions of designing such a structure really were.

Not only must it be able to sustain a railway train, but it must be able to stand against all those natural conditions which varied from the calm heat of a summer's day to the howling tempest of winter. In the designing of that bridge there had been a very remarkable mind at work, and if they fixed their attention on the principal portions of the bridge, and tried to realise what the various dimensions should be, they would begin to find out what the problem really was which the engineers had apparently successfully solved. On the other hand, they had the engineers who were responsible for carrying out the work of construction; and he believed there was equal skill evinced on the part of the constructors as on the part of the designers. The mechanical operations involved in the construction of the bridge had necessitated very great ingenuity in designing the requisite machinery and plant, especially for riveting and placing in position the various parts of the structure. As he had already said, they had seen the work of two distinct types of engineers; the engineers who had designed the bridge were not able to construct it, and on the other hand the engineers who were building the bridge were not able to design it. Great ingenuity had been displayed in the devising of the various appliances for carrying out the undertaking, and they as engineers were certainly proud to visit such a work, because he believed it really was the most gigantic engineering operation which had ever been attempted; in fact, it was rapidly becoming a sort of Mecca for engineers, where they went as pilgrims to visit this shrine of engineering in order to pay homage to the engineers who had designed it, and almost to worship at this engineering triumph of mind over matter.

Mr. T. Ashbury, said, the sentiments which had just been uttered by their President must have been heartily endorsed by everyone who had that day visited that wonderful structure, the Forth Bridge. It was an engineering work the like of which had never been seen before, and the engineer who had designed it, had not only shown them in the Metropolitan Railway how they could safely carry traffic underground, but in his latest engineering work, how they could, with equal safety, carry it over an arm of the sea. He had great pleasure in seconding the vote of thanks which had been proposed by the President.

The proposal was then put to the meeting, and carried with acclamation.

The majority of the party remained in Edinburgh till Monday morning, in the meantime visiting the historical places of the classic city, and a many also sailing to St. Andrews, and other adjacent places.

Early on Monday morning, the party proceeded to the Glasgow Exhibition, at which place another enjoyable day was added to the already pleasant trip, and in the evening the return journey was made to Manchester, thus concluding a visit which was not only enjoyable in every sense of the term, but unique in the history of the Association, since it is the very first on record of any visit being prolonged beyond the customary day.

Manchester Ship Canal: Eastham Section.

On Saturday, 22nd September, upwards of 235 members and friends of the Association, paid a visit to the Eastham Section of the Manchester Ship Canal Works, special arrangement for the inspection of which having been generously made by Mr. E. Leader Williams, C.E., the chief engineer, and Mr. A. Walker, the Contractor. Prominent amongst those present were Mr. S. Dixon, President of the Association; Ald. W. H. Bailey, Vice-President; Mr. E. Leader Williams, Chief Engineer for the Manchester Ship Canal; Mr. S. Platt, Mayor of Oldham and Chairman of the Canal Works Committee.

The party left Manchester at 10-30, travelling *via* Cheshire Lines from Manchester Central to Liverpool Central, special compartments being reserved for their use. From the station at Liverpool they were conveyed in the Company's wagonettes to the George's Landing Stage, where the "Fairy Queen" was waiting with steam up ready to start for Eastham. After a very pleasant sail of about 50 minutes, Eastham was reached, and the party were then met by Mr. T. W. Thompson, of the Ferry Hotel. After partaking of refreshment at the Hotel, a start was made for the works, the party being lead by Mr. Leader Williams. Through the kindness of the contractor, Mr. Walker, a train composed of half-a-dozen suitable trucks was placed at the service of the party, which was taken charge of by Mr. Manisty, the chief agent on this section. *En route* various places of interest were pointed out and described by Mr. Leader Williams, and the site of the locks being also pointed out. Amongst other things, he pointed out the very sheltered character of the approach to the docks, and he incidentally observed, that it was intended to form large cattle depôts in the meadows adjacent to the line of the canal—a portion of the scheme which he thought would develop into great importance and which was not originally contemplated in connection with the undertaking. Particulars had also been forwarded to the Government in reply to enquiries respecting the facilities for constructing an arsenal inland on the route of the canal. Proceeding along the excavation for the lake, Mr. Williams remarked that it was probably the largest that had been carried out in England, and certainly the most extensive that had been effected in so short a time; this they had been able to do by the great improvements which had been effected in the mechanical appliances for excavation, of which they would see various types in operation on the works. The foundations for the entrance locks, which they had just got into, consisted of red rock and boulder clay, and this was also the case with the foundations of the other locks on the line of the canal. At Pool Hall Bay, where a stoppage was made, Mr. Manisty stated that they were passing through a rock cutting from which 500,000 tons of red sandstone was being excavated, and this was being utilised for facing and constructing the canal banks.

With the exception of the dock works at Manchester and Salford, there is no portion of the canal where greater progress has been made than

on the Eastham section, and since this portion of the work was commenced about nine months ago, it is computed that something like 1,500,000 cubic yards of earth have been excavated. In order to dispose of this enormous amount of material, it has been found necessary to form what is practically new land in the vicinity (the hollows at Eastham, near the shore, have been filled up over an area of many acres), and the great basin which is to form the side of the locks at the Eastham terminus, has now assumed the appearance of a large ravine 200 yards in width. The excavations have got down to the foundation of the locks, of which three are to be constructed, abreast of each other; the smallest will be 150ft. by 30ft., the next 350ft. by 50ft., and the largest 600ft. by 800ft. The lock gates will be 80ft. wide in the clear, and probably the largest ever constructed, excepting perhaps the great gates for the new docks at Hull.

On the return journey from Ellesmere Port a stoppage was made at "Cold Blow Villas," which is a name given to a small village of wooden huts erected for the convenience of the navvies engaged on the works; here the party proceeded down into the cutting, led by Mr. Williams, who explained the strata which had been cut through, specially mentioning the boulder clay, specimens of which were laid bare. He also called attention to the pebbles which were to be seen embedded in the clay, and pointed out that this strata stretched from Eastham right across through Nantwich on to the salt mines on the Severn and to the Bristol Channel. Geologists inferred from this that at one time there was water running across this portion of the country, and that icebergs had floated in this water, depositing the stones which they now saw in the strata.

Photographs of the party were taken at various points on the route, and also on their return to Eastham, where they sat down to dinner at the Eastham Ferry Hotel, Mr. S. Dixon, the President in the chair.

In proposing "Success to the Manchester Ship Canal," the Chairman observed that this was a toast which he was sure they would all honour with the greatest enthusiasm—he need not say much to recommend it to them. It was one which was dear to the hearts of all Manchester men; they all felt that the eyes of the world were upon them in this great work, and that in striking out upon this wonderful enterprise they were emphasising the axiom that Manchester was one of the commercial centres of the world. To himself, personally, it was a matter of the greatest interest, as he had been a warm advocate of the scheme from its commencement. They had passed through a period of gloom and doubt with regard to the prospects of the undertaking, and they had now a right to rejoice because they had seen the work of its construction in full swing, with every likelihood of its successful completion. As a commercial venture, it possessed elements of the highest promise, and for everyone who had to prepare estimates for the delivery of machinery in various parts of the world, its advantages were so obvious that they needed no special recommendation from him. In conclusion, he spoke very highly of the abilities displayed by Mr. Leader Williams, the engineer, and the

energy put forward in carrying out the work by Mr. Walker, the contractor, adding that they had that day seen the extraordinary vigour with which the operations for the construction of the canal had been put in hand, and he hoped that they would, as an Association, pay an annual visit to watch their progress until they would join in the triumphant shout which Lancashire would send up on its completion.

Mr. S. R. Platt, chairman of the works committee, in responding to the toast, said they as directors, had the most unlimited faith in the scheme, and whatever else it did, it was bound to bring increased wealth and prosperity to the port and county in which they lived. The system of canals was first started in Lancashire about a hundred years ago, and it was therefore right and proper that this should be the first district in which a large ship canal should be constructed from the ocean to the centre of commerce. He had no doubt that they would repeat on the banks of the Manchester Ship Canal what had already been done on the banks of the Clyde and the Tees, and he had been surprised that the river Mersey had been allowed to lie fallow so long. No engineering difficulties had shown themselves up to the present, and it would be their disgrace if they did not see the work successfully accomplished.

Alderman Bailey also responded on behalf of the directors of the Ship Canal Company, and said that the members of the board had entire confidence in each other, and worked together with perfect unanimity. They had all the elements of success within themselves, and there was no doubt whatever that the scheme would not only prove financially sound so far as the shareholders were concerned, but it would also promote the best interests of Liverpool. The great abilities of their chief engineer, and the energy and resources of their contractor, were guarantees that the work would be successfully carried out.

Mr. E. Leader Williams, C.E., in responding to the toast, said that the Manchester Ship Canal was the work of his life, and now that he could see it being rapidly developed by the admirable contractor into whose hands the carrying out of the work had been placed, it was a proud day for him to meet so many of his own profession assembled to inspect the progress of the undertaking. Although so far the work had progressed without any serious engineering difficulties, he did not say that before it was finished it would all be easy work; there would no doubt be some difficulties to encounter, but it was the province of every engineer to overcome difficulties, and with such an able board of directors and so energetic a contractor, he had every confidence that the work of constructing the canal would be completed within the specified time.

The health of the contractor, Mr. T. A. Walker, was proposed in eulogistic terms by Alderman Buckley, and the health of the President of the Associatson, proposed by Mr. John Craven, brought the proceedings to a close.

The official programme having been arranged to terminate on the conclusion of the dinner, the party proceeded to view the various places of interest about Eastham, and returning to Manchester at any time which might be the most convenient to themselves.

As mentioned above, several photographs of the party, in various positions, were taken, which the photographer brought to the Grand Hotel at a subsequent meeting of the Association, and, which to say the least, are very interesting and pleasing reminiscenses of the visit. The first group, as our members who were present will be aware, was taken of the whole party as they stood in the wagons. Nine wagons, each containing to 20 to 30 persons, make a unique picture, and we venture to say such a picture—considering the place, circumstances, and company—as will not again be obtainable. The next view is none the less striking. In this the photographer had arranged the party on the side of one of the cuttings in the lock pit at Eastham. The third and last photograph was taken at the Ferry Hotel. In this case, the party is assembled on the garden lawn, and are formed in a half circle, or nearly so.

TREASURER'S GENERAL CASH ACCOUNT, FOR YEAR ENDING 31st DECEMBER, 1888.

(Including Superannuation Fund Account.)

Dr.

1888.				£	s.	d.
Jan. 1.	To Balance as per last Report			2568	1	3
Dec. 31.	,, Contributions and Entrance Fees			436	19	6
	,, Transactions—sold			23	11	5
	,, Interest from Loans in Building Societies ...	£26	13	4		
	,, ,, ,, Mortgages on Properties	36	0	0		
	,, ,, ,, Stock—Salford Corporation...	16	19	8		
	,, ,, ,, Bank	6	13	1		
					86	6	1
				£3114	18	3

Audited and found correct.

T. WOOD,
A. REA,
W. R. GOULTY, } AUDITORS.

21st July, 1888.
12th Jan. 1889.

Cr.

1888.					£	s.	d.
Jan. 1.	By Rent—Grand Hotel				20	0	0
to	,, Secretary's Salary	£30	0	0			
Dec. 31.	,, Assistant Secretary's Salary.....	12	10	0			
					42	10	0
	,, Superannuation Allowance				92	15	0
	,, Funeral Allowances:						
	,, D. Anderson	£10	0	0			
	,, J. Britton	10	0	0			
	,, T. Wood	10	0	0			
					30	0	0
	,, Printing and Stationery.....				136	18	0
	,, Expenses, illustrating paper on "Forth Bridge"				5	18	7
	,, Books purchased for Library, Binding, &c.				1	14	10
	,, Insurance Premium on Library				0	6	0
	,, Deputations to London, Leeds, & N'castle Associations				8	5	6
	,, Thirty-first Anniversary Dinner.....				8	5	0
	,, Audit and Committee Expenses, Postage & Petty Cash				54	5	6
	,, Cash invested as Loans in B'ding Societies	£790	0	0			
	,, ,, Advanced on Properties (Mortgages)	800	0	0			
	,, ,, Salford Corporation Stock	500	0	0			
	,, ,, in Bank	595	4	5			
	,, ,, ,, Treasurer's hands	23	16	10			
	,, ,, ,, Secretary's ,, ...	4	18	7			
					2713	19	10
					£3114	18	3

SUPERANNUATION FUND ACCOUNT, FOR YEAR ENDING 31st DECEMBER, 1888.

(Included in General Account.)

Dr.

1888.		£	s.	d.	£	s.	d.
Jan. 1.	To Capital invested as per Resolution passed at the Half-yearly Meeting, 14th June, 1879 ..	2100	0	0			
	,, Additional Capital voted at the Annual Meeting, 13th December, 1884.....	300	0	0			
	,, Balance of Interest from last Report	14	12	9			
					2414	12	9
Dec. 31.	,, Twelve Months' Interest on Capital Invested as per General Account				86	6	1
					£2500	18	10

Cr.

1887.		£	s.	d.	£	s.	d.
Jan. 1. to Dec. 31.	By Superannuation Allowance:— Mr. C. Millward	13	0	0			
	,, O. Williams.....	13	0	0			
	,, W. McGeorge.....	13	0	0			
	,, W. Vickers	13	0	0			
	,, J. R. Wolstenholme	6	10	0			
	,, E. Goodall	13	0	0			
	,, R. Pearson	11	5	0			
	,, J. Nicoll	7	10	0			
	,, G. Vickers	2	10	0			
					92	15	0
	,, Balance to credit of Superannuation Fund Account				2408	3	10
					£2500	18	10

Audited and found correct.

A. REA,
W. R. GOULTY, } AUDITORS.

12*th January*, 1889.

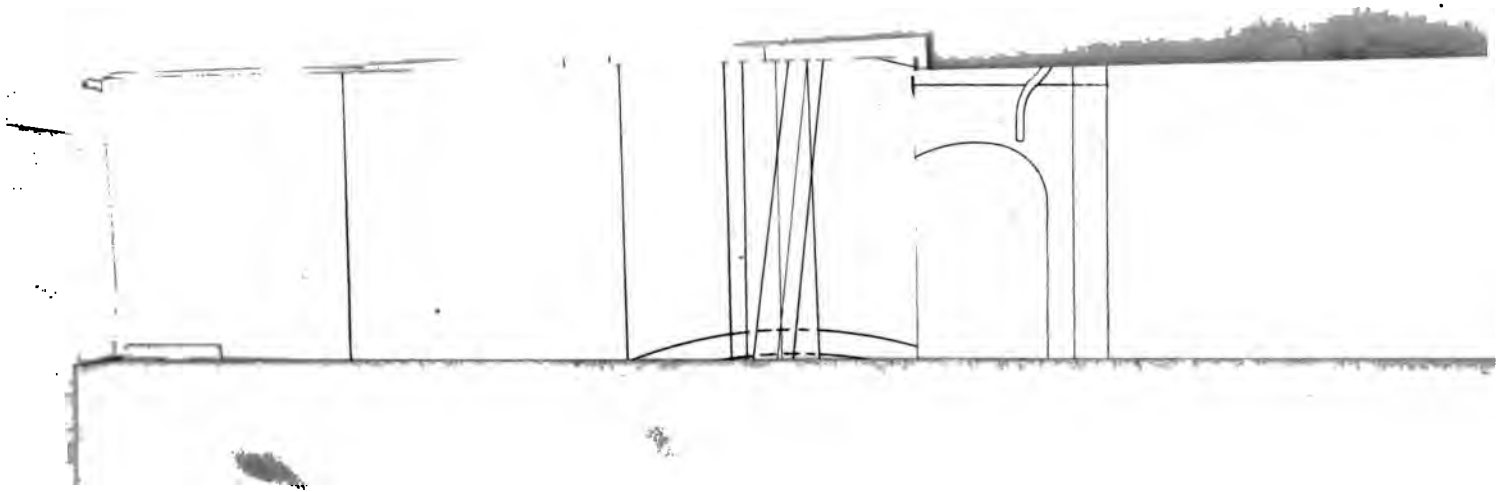

SUPERANNUATION FUND ACCOUNT, FOR YEAR ENDING 31st DECEMBER, 1888.

(Included in General Account.)

Dr.

1888.		£	s.	d.	£	s.	d.
Jan. 1.	To Capital invested as per Resolution passed at the Half-yearly Meeting, 14th June, 1879 ..	2100	0	0			
	,, Additional Capital voted at the Annual Meeting, 13th December, 1884.....	300	0	0			
	,, Balance of Interest from last Report	14	12	9			
					2414	12	9
Dec. 31.	,, Twelve Months' Interest on Capital Invested as per General Account				86	6	1
					£2500	18	10

Cr.

1887.		£	s.	d.	£	s.	d.
Jan. 1. to Dec. 31.	By Superannuation Allowance:— Mr. C. Millward	13	0	0			
	,, O. Williams.....	13	0	0			
	,, W. McGeorge.....	13	0	0			
	,, W. Vickers	13	0	0			
	,, J. R. Wolstenholme	6	10	0			
	,, E. Goodall	13	0	0			
	,, R. Pearson	11	5	0			
	,, J. Nicoll	7	10	0			
	,, G. Vickers	2	10	0			
					92	15	0
	,, Balance to credit of Superannuation Fund Account				2408	3	10
					£2500	18	10

Audited and found correct.

A. REA,
W. R. GOULTY, } AUDITORS.

12th January, 1889.

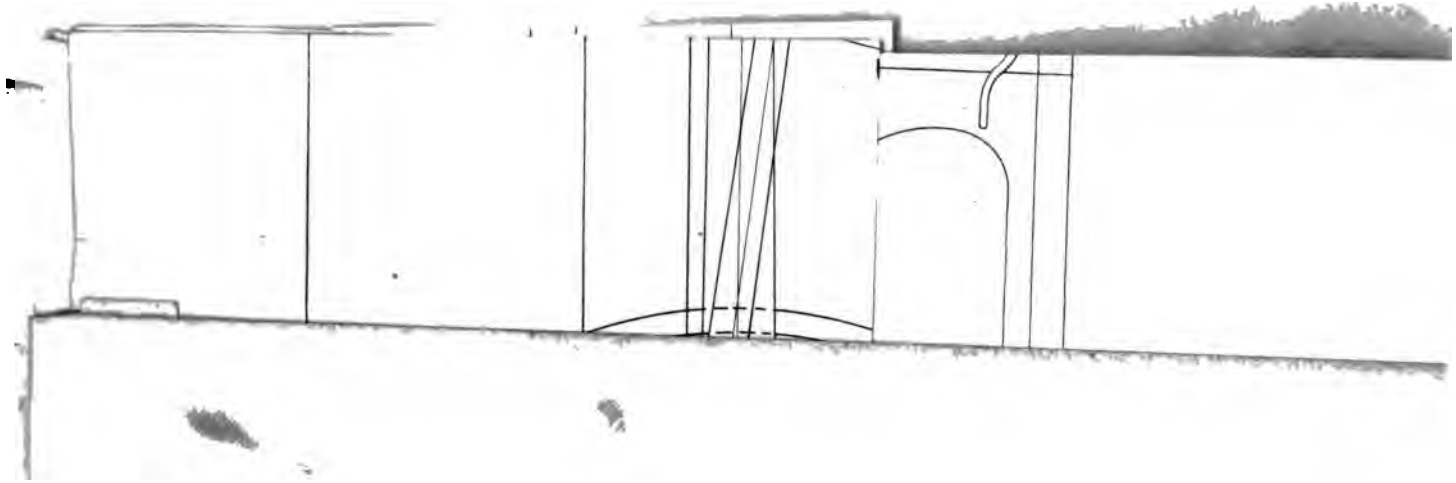

PLATE 5

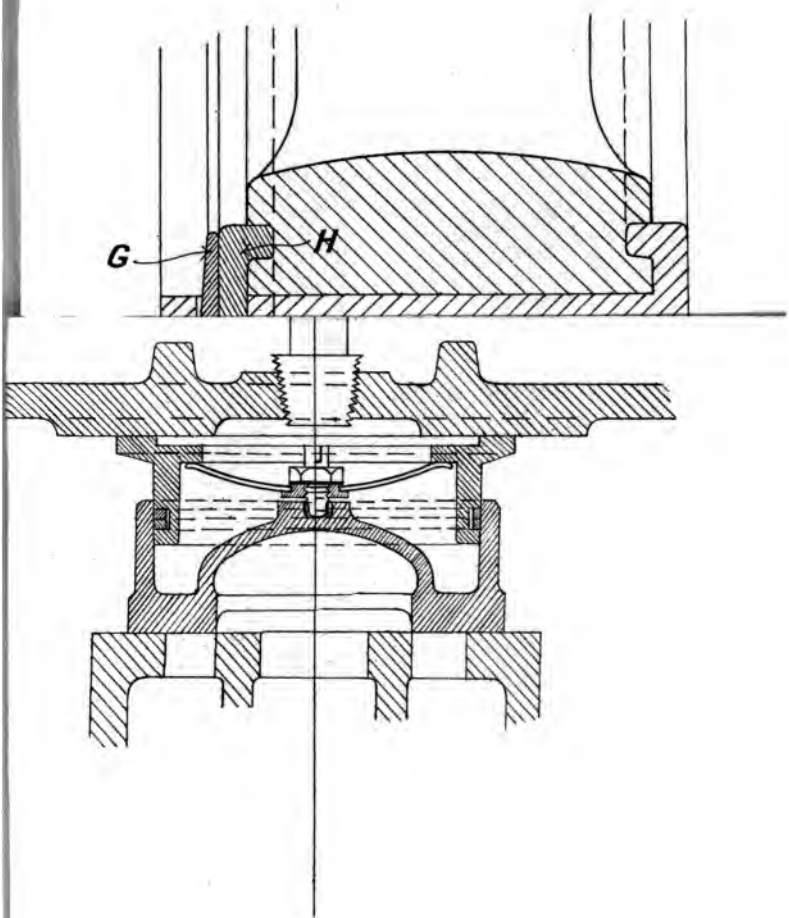

HERALD & WALKER, TYP., MANCHESTE

SUPERANNUATION FUND ACCOUNT, FOR YEAR ENDING 31st DECEMBER, 1888.

(Included in General Account.)

Dr.

1888.		£	s.	d.	£	s.	d.
Jan. 1.	To Capital invested as per Resolution passed at the Half-yearly Meeting, 14th June, 1879 ..	2100	0	0			
	,, Additional Capital voted at the Annual Meeting, 13th December, 1884.....	300	0	0			
	,, Balance of Interest from last Report	14	12	9			
					2414	12	9
Dec. 31.	,, Twelve Months' Interest on Capital Invested as per General Account				86	6	1
					£2500	18	10

Cr.

1887.		£	s.	d.	£	s.	d.
Jan. 1. to Dec. 31.	By Superannuation Allowance:—						
	Mr. C. Millward	13	0	0			
	,, O. Williams.....	13	0	0			
	,, W. Mc.George.....	13	0	0			
	,, W. Vickers	13	0	0			
	,, J. R. Wolstenholme	6	10	0			
	,, E. Goodall	13	0	0			
	,, R. Pearson	11	5	0			
	,, J. Nicoll	7	10	0			
	,, G. Vickers	2	10	0			
					92	15	0
	,, Balance to credit of Superannuation Fund Account				2408	3	10
					£2500	18	10

Audited and found correct.

A. REA,
W. R. GOULTY, } AUDITORS.

12*th January*, 1889.

PLATE 5

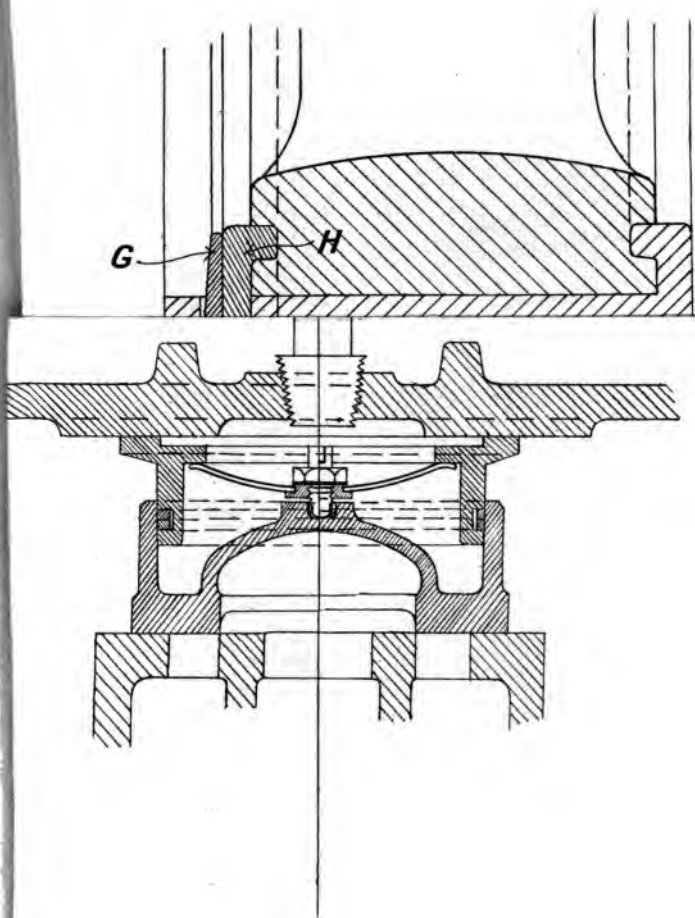

HERALD & WALKER, TYP., MANCHT

SEP 1 0 1937